Pumping station systems

PS.R.05-17

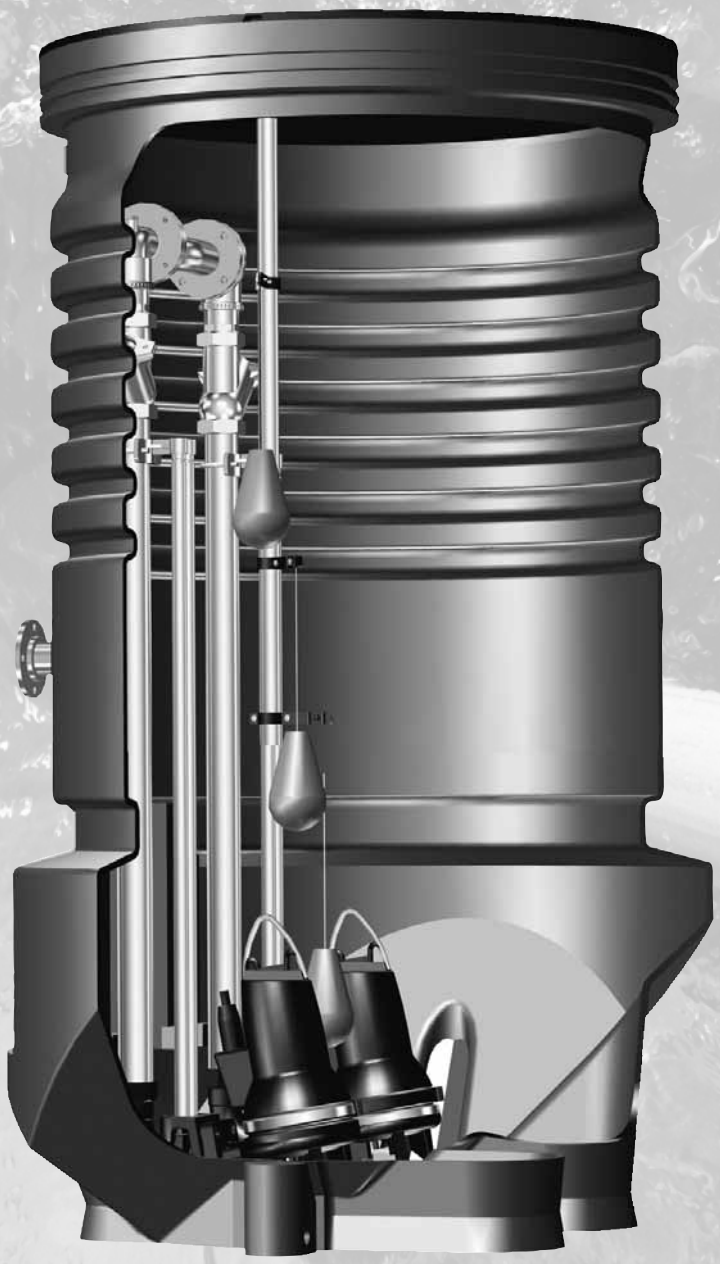

be
think
innovate

GRUNDFOS

1. Introduction **3**
The complete system . . . 3
Great advantages . . . 3
Component overview . . . 4
Pumped liquids . . . 4

2. Identification **5**

3. Selection of products **7**
Selection tool . . . 8
Pipe variants . . . 9
Pumping station variants . . . 10
CE mark . . . 10

4. Construction **11**
Pumping station . . . 11
Valve chamber . . . 12
Pumping station variants . . . 12

5. Pump controllers **16**
IO 113 . . . 16
SM 113 . . . 16
Level controllers . . . 16
CUE . . . 18
$AUTO_{ADAPT}$ pumps . . . 19

6. Accessories **21**

7. Installation **23**
Installation . . . 23

8. Technical data **24**
Starting frequency . . . 24
Sump volume . . . 24
Dimensions and weights . . . 26

9. Grundfos Product Center **27**

1. Introduction

Grundfos pumping stations are prefabricated pumping stations designed for collection and pumping of drainage water, rainwater or wastewater.

The pump pit is made of polyethylene (PE-HD) and comes with outlet pipe and valves fitted. The pump(s) may be supplied separately.

The pipes are made of polyethylene (PE) or stainless steel (AISI 304).

Unless another cover solution is selected, D500 to D1200 pits are supplied with a polyethylene cover (PE-HD), locked with a special M10 bolt. The D1700 pit has an aluminium cover, locked with a padlock. As an option, the D1700 pit can be modified with a reduced top to use the D1200 PE cover.

The pump type will depend on the type of pumped liquid.

The drainage water, rainwater or wastewater is led into the pit. When the liquid in the pit reaches the start level, the pump(s) will start and pump the liquid further in the system to a sewage treatment plant or sewer.

The complete system

Now, all the components of your pumping stations can be Grundfos quality. To complement our range of high-quality pumps and pumping equipment, we have developed a complete pumping station range featuring all the qualities you need:

- sturdy materials
- well-designed polyethylene pits
- all necessary accessories such as pipes and valves, as well as reliable controllers.

You get a complete pumping station ready to be installed. Getting everything from one supplier, you can be certain that all components meet the most stringent quality requirements and fit perfectly together.

Once the pumping station is installed, you will find that maintenance is reduced to an absolute minimum.

The combination of sturdy materials and convenient access to valves and pumps not only makes service and maintenance easier, it also makes them much less frequent.

Great advantages

- **Corrosion-free materials**
  Grundfos pumping stations are made of corrosion-free materials throughout. This uncompromising choice of materials and the unique design make the pumping stations remarkably service-friendly and reliable.
- **Modular flexibility**
  The prefabricated pumping stations consist of four main elements:
  – one or two of our highly efficient and reliable pumps
  – a pit in the size to suit your requirements
  – all pipes and valves
  – controllers to ensure operational efficiency and safety.
- **Many sizes available**
  The pits are available various sizes, comprising five standard diameters and up to four standard depths. The standard range is regularly updated with more variants. For the latest updates, see www.grundfos.com/pumping stations.
- **Installation- and service-friendly design**
  The pit has an extended sump to secure the pit against uplift when installed in areas with high groundwater level (DS/EN 1997-1 DK NA:2015, safety against uplift).
  At the same time, the extended cone-shaped sump improves the self-cleaning effect and thereby limits sludge and odour problems. All components in the pumping station can be reached from the top. In pit sizes below D1200, the auto coupling is secured in the bottom position without any use of screws. It is possible to remove the coupling together with the pipework without entering the pit.

Component overview

The components of the pumping station are selected according to Grundfos's principles of high reliability, long life and great consideration for the environment during production, operation and disposal.

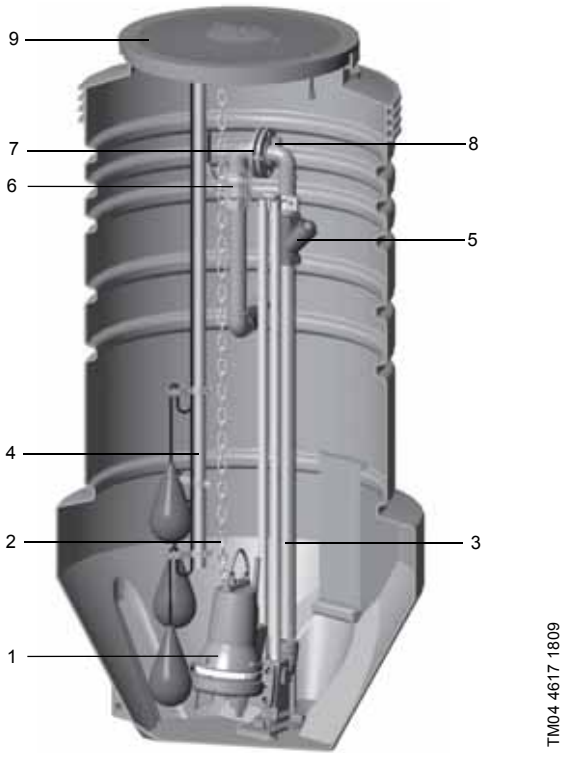

Fig. 1 Example of pumping station

Pos.	Description
1	Pump
2	Lifting chain
3	Guide rails
4	Level control system
5	Non-return valve
6	Isolating valve
7	Flange connection
8	Connection, 1/2" internal thread
9	Cover

Grundfos offers a number of standard pits, but we recommend that you size and configure a pumping station based on your specific needs using the "Grundfos pumping station creator" to ensure the best solution. See *Selection tool* on page 8 or follow the link below.

Grundfos pumping station creator

https://app.grundfos.com/pust/frontpage

Pumped liquids

- Drainage water
- rainwater (surface water)
- wastewater.

Liquid temperature

The liquid temperature that can be handled depends on the pump selected. See the installation and operating instructions for the pump. In general, the maximum liquid temperature is 40 °C. If your liquid has a higher temperature, contact your local Grundfos company.

For certain pump types, 60 °C are permissible for short periods. At 60 °C, the pit material begins to soften.

Acids and alkalis

The pump pit is resistant to strong acids and alkalis as well as solvents.

The pumps are supplied with the pump pit and are normally resistant to pH values between 4 and 10. In case of doubt, contact your local Grundfos company.

Viscosity

Very thick wastewater must not be led into the pit. See also the installation and operating instructions for the pump.

Density

Maximum 1100 kg/m^3.

2. Identification

Nameplate, PS.S

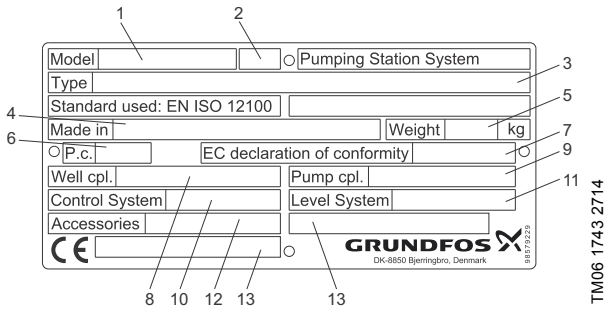

Fig. 2 Nameplate, PS.S

Nameplate, PS.M

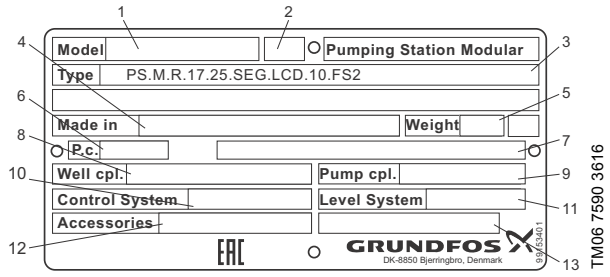

Fig. 3 Nameplate, PS.M

Pos.	Description
1	Product number
2	Production site
3	Type designation
4	Country of origin
5	Weight
6	Production code and date of production (YYWW)
7	Installation and operating instructions, publication number
8	Product number, pit
9	Product number, pump
10	Product number, pump controller
11	Product number, level controller
12	Product number(s), accessories
13	Not filled in

Type key, PS.S

Example	PS.	S.	R.	17.	25.	SEG.	LCD110.	FS2

Grundfos pumping station

S: CE-marked system
M: Modular system

Pit type and material
R: Rotation-moulded PE

Pit sump diameter [mm] x 100
05: 500 mm
08: 800 mm
10: 1000 mm
12: 1200 mm
17: 1700 mm

Pit depth [mm] x 100
25: 2500 mm

Pump type
CC: Unilift CC
KP: Unilift KP
AP12: Unilift AP12.50
AP35: Unilift AP35, Unilift AP12.40
AP50: Unilift AP50
APB: Unilift AP35B, Unilift AP50B
SEG: SEG
DP/EF: DP (0.6 - 1.5 kW), EF
DP/SL: DP (2.6 kW), SL1.50.65 and SLV.65.65
DPK: DPK, DPK.V
SE/SL: SE/SL

Pump controller
X: No Grundfos controller
BIP: Built into the pump
CU: Control unit
LC107: Level controller
LC108: Level controller
LC110: Level controller
LC115: Level controller
LCD107: Level controller - two pumps
LCD108: Level controller - two pumps
LCD110: Level controller - two pumps
LCD115: Level controller - two pumps
DC318: Dedicated Controls
DC319: Dedicated Controls
DCD318: Dedicated Controls - two pumps
DCD319: Dedicated Controls - two pumps

Level controller
BIP Built into the pump
AB2: Two air bells
AB3: Three air bells
FS2: Two float switches
FS3: Three float switches
FS4: Four float switches
FS5: Five float switches
EL3: Three electrodes
EL4: Four electrodes
EL5: Five electrodes
PT: Pressure transducer
PF1: Pressure transducer + one float switch
PF2: Pressure transducer + two float switches

Nameplate, PS.R.05 - PS.R.17

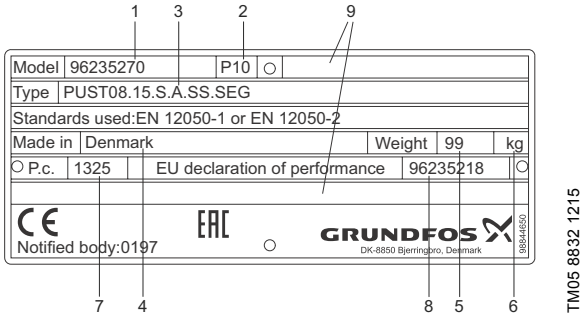

Fig. 4 Nameplate PS.R.05 - PS.R.17

Pos.	Description
1	Product number
2	Production site
3	Type designation
4	Country of origin
5	Weight
6	Production code and date of production (YYWW)
7	Installation and operating instructions, publication number
8	Not filled in
9	Not filled in

Type key, PS.R.05 - PS.R.17

Example PS. R. 17. 25. D. GC. SS50. A50. SEG

Pumping station

Rotation-moulded pit

Pit sump diameter [mm] x 100
05: 500
08: 800
10: 1000
12: 1200
17: 1700

Pit depth [mm] x 100
25: 2500

S: One pump
D: Two pumps

Pipe design
DC: Direct outlet, common
GC: Goose neck, common
VC: Valve chamber

Pipe material and pipe diameter
Stainless steel:
SS40: DN 40 (1 1/2")
SS50: DN 50 (2")
SS65: DN 65 (2 1/2")
SS80: DN 80 (3")
SS100: DN 100 (4")
Polyethylene:
PE40: D40 mm (1 1/4")
PE50: D50 mm (1 1/2")
PE63:* D63 mm (2")
PE75: D75 mm (2 1/2")
PE90: D90 mm (3")
PE110: D110 mm (4")

Installation type
Auto coupling:
A40: DN 40 pump connection
A50: DN 50 pump connection
A65: DN 65 pump connection
A80: DN 80 pump connection
A100: DN 100 pump connection
Free-standing pump:
S: Free-standing pump
Hookup auto coupling:
H40: DN 40 pump connection

Pump type
KP: Unilift KP, Unilift CC
AP35: Unilift AP12.40, Unilift AP35
AP50: Unilift AP12.50, Unilift AP50
APB: Unilift AP35B, Unilift AP50B
SEG: SEG
DP/EF: DP (0.6 - 1.5 kW) / EF
DP/SL: DP (2.6 kW) / SL1.50.65 / SLV.65.65
DPK: DPK, DPK.V
SE/SL: SE/SL (max. 7.5 kW)

* Maximum 3 m pit depth

3. Selection of products

When ordering a Grundfos pumping station, you need to take the following six aspects into consideration:

1. Pump
2. Installation type of the pump
3. Diameter and depth of pit
4. Level control system
5. Pump controller
6. Accessories.

1. Pump

See the data booklet for the selected pump or Grundfos Product Center at www.grundfos.com and *Type key, PS.R.05 - PS.R.17* on page 6. For further information about Grundfos Product Center, see page 27.

2. Installation type of the pump

See *Type key, PS.R.05 - PS.R.17* on page 6.

The pump(s) can be installed in three ways:

- on a standard auto-coupling system on the bottom of the pit
- on a hookup auto-coupling system at the top of the pit
- free-standing.

3. Diameter and depth of pit

The pump pit is available in various sizes. See *Dimensions and weights* on page 26 for dimensions and for calculation of needed volume.

Depth [mm]	D500	D800	D1000 One pump	D1000 Two pumps	D1200 One pump	D1200 Two pumps
1500			•			
2000	•	•	•	•	•	•
2500		•	•	•	•	•
3000		•	•		•	•

Depth [mm]	D1700, two pumps		
	Pipe, SS	Pipe, PE	
	DN 50-DN 100	D63 mm	D75-D110 mm
2000	•	•	•
2500	•	•	•
2840	•	•	•
3000	•	•	•
3170	•		•
3340	•		•
3500	•		•
3670	•		•
3840	•		•
4000	•		•
4170	•		•
4340	•		•
4500	•		•
4670	•		•
4840	•		•
5000	•		•
5170	•		•
5340	•		•
5500	•		•
5670	•		•
5840	•		•
6000	•		•

4. Level control system

See *Pump controllers* on page 16 or Grundfos Product Center.

5. Pump controller

See *Pump controllers* on page 16 or Grundfos Product Center.

6. Accessories

Depending on the installation type, accessories may be required. For selection of the correct accessories, see *Pump controllers* on page 16.

Selection tool

You can find the selection tool PUMPING STATION CREATOR in Grundfos Product Center at www.grundfos.com or follow the link in the QR code below.

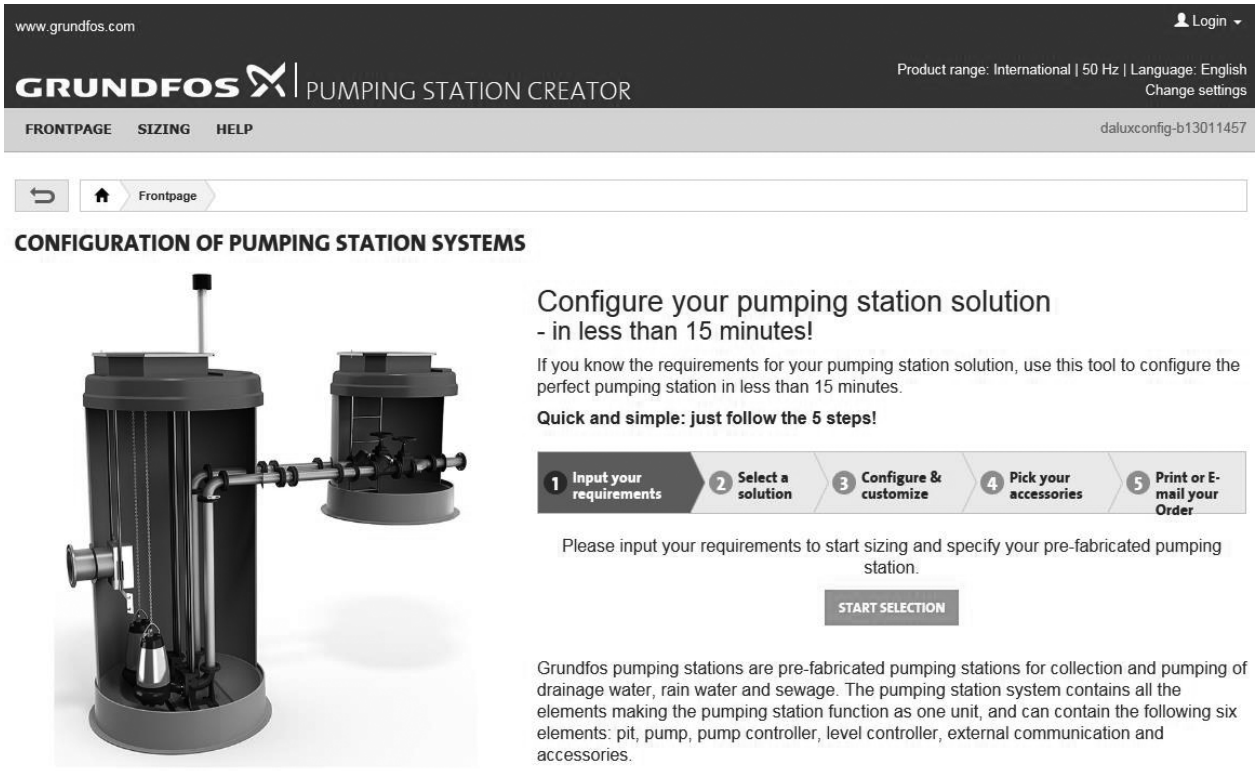

TM06 3497 0415

Fig. 5 Selection tool in Grundfos Product Center

1. **Input (enter) your requirements**
   Here you enter information about flow rate, head, number of pumps and operating mode. This will ensure that we offer the right pump for the task. Please also enter information about the depth of the lowest inlet to the pumping station to get some good suggestions for solutions. The selection tool offers a list of pumps from which you can select the pump that best fits your requirements.
2. **Select a solution**
   Here a number of possible solutions are presented, and you can select the one that fits your requirements.
3. **Configure & customize**
   Here you can make the detailed configuration of the selected solution. Drawings of the selected solution are presented.
4. **Pick your accessories**
   Here you can select accessories for your customised solution.
5. **Print or e-mail your order**
   Here the final solution is presented as a CAD drawing that can be downloaded. Specification reports for the customised solution can be generated, printed and sent to Grundfos. This is the information Grundfos needs to give you a quotation and lead time for delivery.

https://app.grundfos.com/pust/frontpage

Pipe variants

Pipe design		Stainless steel (EN 1.4301/AISI 304)					Polyethylene (PE)					
		DN 40	DN 50	DN 65	DN 80	DN 100	D40	D50	D63	D75	D90	D110
GC	Goose neck*	•	•	•			•	•	•			
GC	Goose neck, common**		•	•	•	•			•	•	•	•
DC	Direct outlet, common		•	•	•	•			•	•	•	•
VC	Valve chamber								•	•	•	•

* For one pump installations.
** For two pump installations.

Examples of pipe design



TM05 3322 1112

Fig. 6 DC, pipe system with direct, common outlet

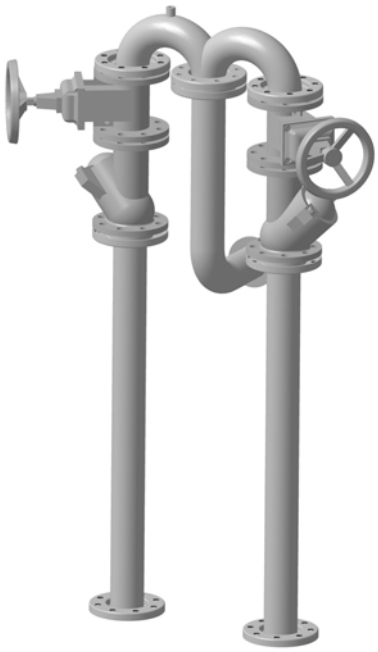

TM05 3319 1112

Fig. 8 GC, pipe system with goose neck and common outlet



TM06 8826 1217

Fig. 7 DC, pipe system on hookup auto coupling (stainless steel, DN 40) with direct, common outlet



TM05 3319 1112

Fig. 9 VC, valve chamber (no valves inside the pumping station)



TM06 2675 4514 - TM06 2676 4514

Fig. 10 GC, pipe systems with goose neck, PE D63, stainless steel DN 50, and common outlet

Pumping station variants

If you did not find the required pumping station in our standard range, please contact your local Grundfos company. We have other ranges of prefabricated pumping stations, but they vary from region to region.

For large prefabricated pumping stations, please see Grundfos Product Center or contact your local Grundfos company for information about range and designs available in your region. We offer a huge range of large prefabricated pumping stations to fit our range of large pumps. This range covers versions up to 3 metres in diameter and 12 metres in depth in both glass-fibre-reinforced polyester, polyethylene and polypropylene.

CE mark

Grundfos pumping stations are CE-marked. Depending on the pump and controller selected, they are marked in accordance with one or several of the following directives:

- EMC Directive
- Low Voltage Directive
- ATEX Directive
- Machinery Directive.

The declaration of conformity and declaration of performance can be seen in the installation and operating instructions of the products in question.

4. Construction

Pumping station

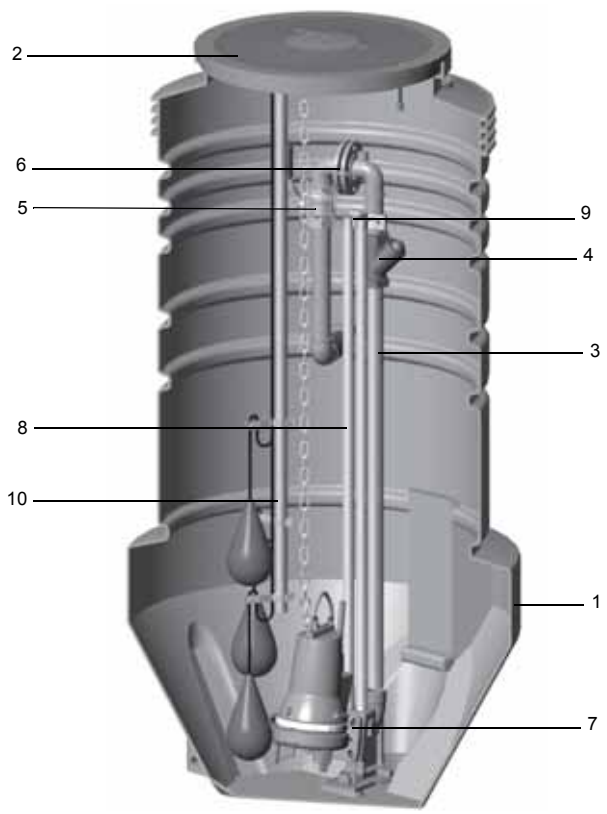

Fig. 11 Grundfos pumping station

Components and material specification

Pos.	Component	Material	D500-D1200	D1700	DIN W.-Nr./ EN standard	AISI/ASTM
1	Pit	PE HD	●	●		
2	Cover	PE HD	●	●*		
		Aluminium	-	●		
	Safety grid	Stainless steel	-	●*	1.4301	304
		Aluminium	-	●		
3	Pipes	Stainless steel	●	●	1.4301	304
		PE	●	●		
4	Non-return ball valve	NBR rubber and stainless steel	●	-	1.4301	304
		Stainless steel	●	●	1.4401	306
		Epoxy-coated cast iron	-	●	GJS-400-15 / GGG-40	
5	Isolating ball valve	PP	●	●		
		Stainless steel	●	●	1.4301	304
	Isolating valve	Epoxy-coated cast iron	-	●	GJS-500-7 / GGG-50	
6	Pipe connection	PP, quick coupling	●	●		
		Stainless steel, quick coupling	●	-	1.4301	304
		PE, flanged	-	●		
		Stainless steel, flanged	●	●	1.4301	304
7	Auto coupling	Cast iron(EN-GJL-250/EN-JL 1040)	●	●		
		Stainless steel	●	-	1.4301	304
8	Guide rails	Galvanised pipe	●	●		
9	Guide rail brackets	Stainless steel	●	●	1.4301	304
10	Brackets for level sensors	Stainless steel	●	●	1.4301	304
	Screws	Stainless steel	●	●	1.4301	304

PE HD: Polyethylene, high density
PP: Polypropylene
*: Only available with reduced top

Valve chamber

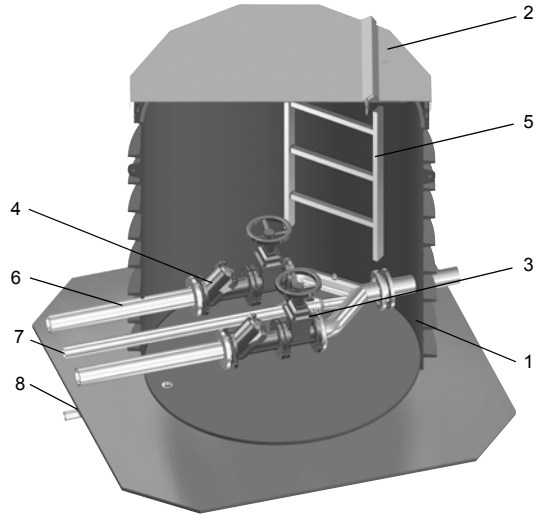

TM06 4265 1317

Fig. 12 Grundfos valve chamber

Components and material specification

The valve chamber always includes a drainage pipe leading to the pumping station.

Pos.	Component	Material	DIN W.-Nr./ EN standard	AISI/ASTM
1	Valve chamber	PE HD	-	-
2	Cover	Aluminium or PE HD*	-	-
3	Isolating valve	Epoxy-coated cast iron	GJS-500-7 / GGG-50	-
4	Non-return valve	Epoxy-coated cast iron	GJS-400-15 / GGG-40	-
5	Ladders	Aluminium	-	-
6	Pipes	Stainless steel	1.4301	304
		PE	-	-
7	Return pipe	Stainless steel	-	-
		PE	-	-
8	Drainage pipe	PE	-	-

PE HD: Polyethylene, high density
*: Only available with reduced top

Pumping station variants

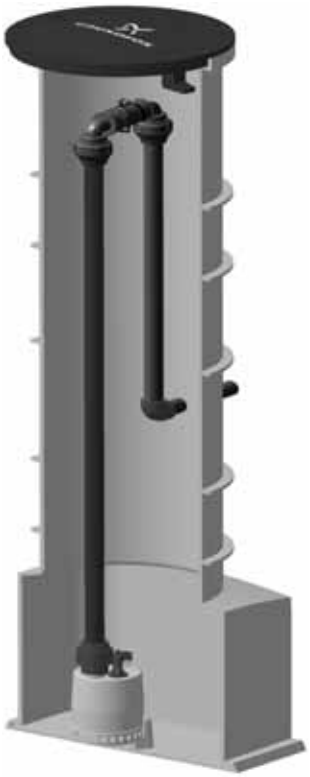

TM06 2667 2117

Fig. 13 Pit with free-standing pump with goose neck outlet



TM06 2667 4514

Fig. 14 Pit with pump on auto coupling with goose neck outlet



TM06 8856 1317

Fig. 15 D1000 pit with two pumps on hookup auto coupling

Note: Hookup auto coupling is also available for single-pump installation in pits of D1000.

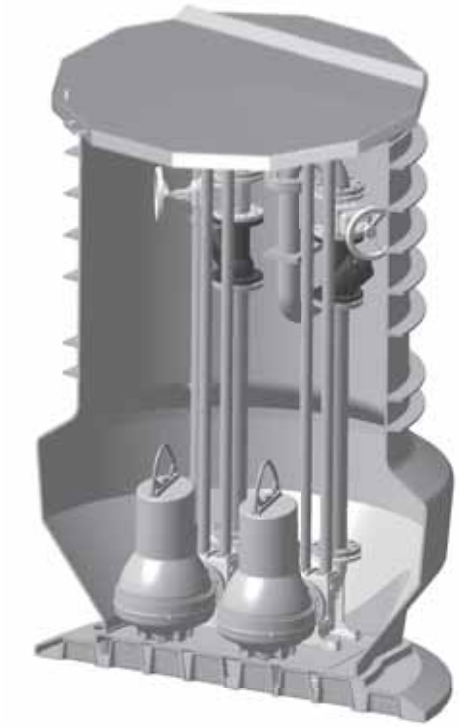

TM05 8451 1917

Fig. 16 Pit with two pumps and goose neck outlet

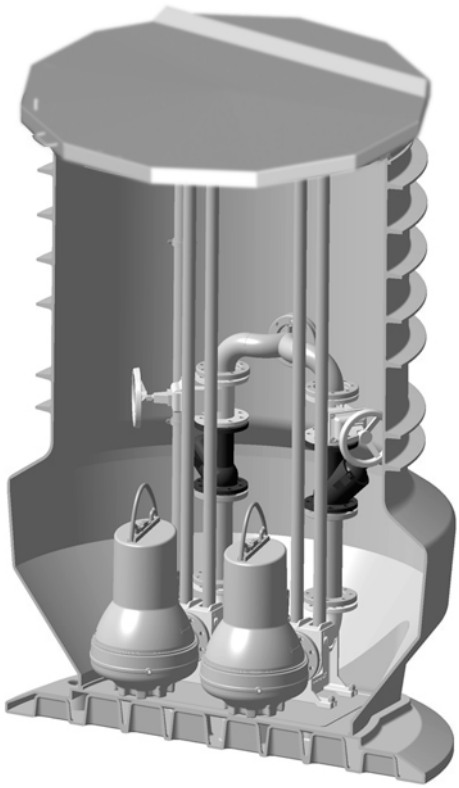

TM05 3323 1817

Fig. 17 Pit with two pumps and direct outlet

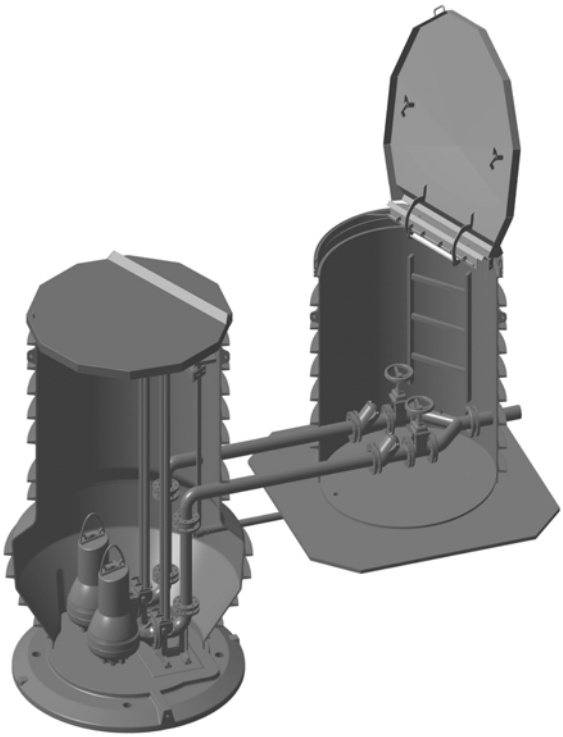

TM06 1709 1217

Fig. 18 D1700 pit with two pumps on auto coupling and D1700 valve chamber

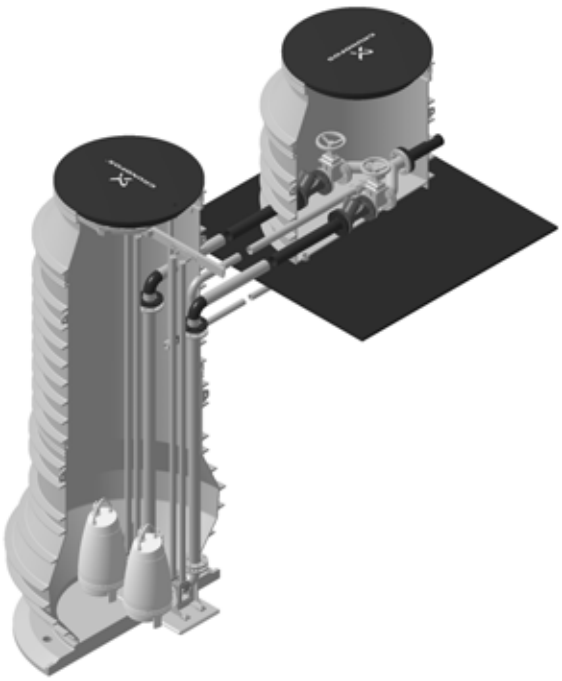

TM06 8851 1917

Fig. 19 D1700 pit with reduced top (suitable for PE cover of D1200).

Covers

All pumping stations are equipped with a cover that can be locked. Pits with D1700 cover have a safety grid.

Standard covers

Standard covers for pits D500-D1200 are made of PE and load tested according to EN124, class A15.

The covers can be locked by means of a special stainless A2 bolt.

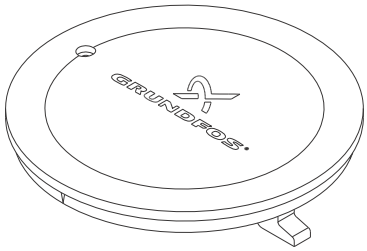

TM06 2655 1417

Fig. 20 D500 cover

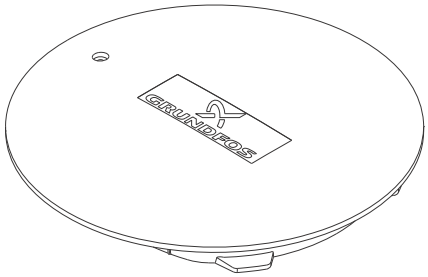

TM06 2656 1217

Fig. 21 D800, D1000 cover

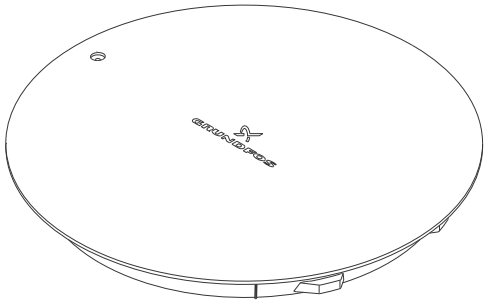

TM06 2657 1217

Fig. 22 D1200 and D1700 with reduced cover

The standard cover for D1700 is made of aluminium and load tested according to EN124, class A15. The cover is equipped with a safety grid, and the cover can be locked with a padlock.



TM05 3321 1317

Fig. 23 D1700 cover with safety grid

Covers approved for traffic

The traffic covers come in three versions as shown below. The covers are load approved according to EN 124, class D400.

Pit diameter	Cover type		
	Fixed	Adjustable	Flush
D800	•	•	
D1000	•	•	
D1200	•	•	
D1700		•	•

The fixed cover has a concrete cone or ring and a cast iron hatch. See fig. 24 and 25.

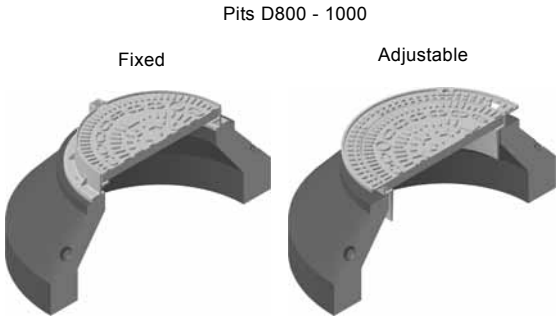

Fig. 24 Traffic covers for D800 - D1000 pits

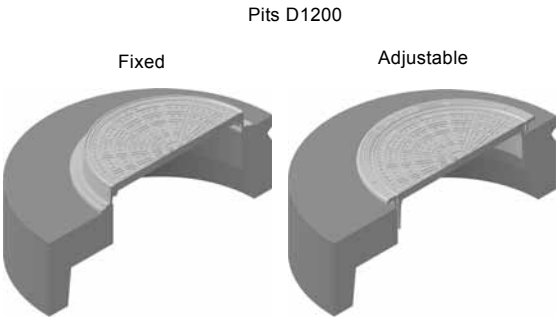

Fig. 25 Traffic cover for D1200 pits

D1700 pits have a concrete ring and an adjustable or fixed flush cover, and they are equipped with a galvanised steel hatch and a safety grid.

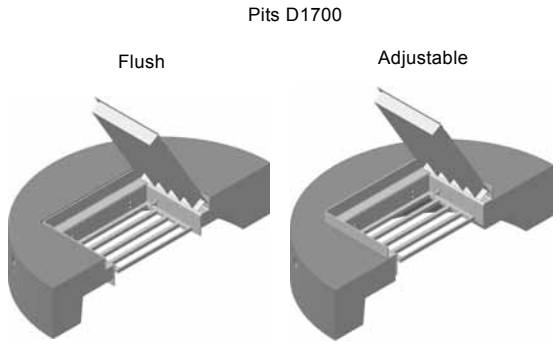

Fig. 26 Traffic covers for D1700 pits

Baffle plate

The baffle plate slows the incoming flow of liquid and prevents splattering inside the pit.

The baffle plate is available for D1700 pits for all pipe sizes.



Fig. 27 Baffle plate

Screen basket

The screen basket holds back solid materials, such as stones and branches in the incoming flow of liquid.

The screen basket is available for D1700 pits as standard for all pipe sizes.



Fig. 28 Screen basket

5. Pump controllers

IO 113

IO 113 is a protection module for Grundfos wastewater pumps.

The module has inputs for digital and analog sensors and can stop the pump if a sensor indicates a pump fault.

The module is connected to the Dedicated Controls system and allows advanced monitoring functions, such as:

- motor temperature
- moisture in the motor
- water in oil or water in air
- insulation resistance.

SM 113

SM 113 is used for collection and transfer of sensor data. The module works together with IO 113 through power line communication using the Grundfos GENIbus protocol.

The module can collect data from these devices:

- 3 current sensors, 4-20 mA
- 3 Pt1000 thermal sensors
- 1 thermistor circuit (3 sensors in series)
- 1 digital input.

Level controllers

Grundfos offers a wide range of level controllers to keep a watchful eye on liquid levels in the wastewater pit, ensuring correct operation and protection of the pumps.

Controller ranges:

- Dedicated Controls: DC and DCD
- LC and LCD level controllers
- CU 100 control box.

The DC, LC and CU 100 are designed for one-pump installations, and the DCD and LCD are designed for two-pump installations.

Dedicated Controls

Grundfos Dedicated Controls is a control system that can control and monitor from one to six Grundfos wastewater pumps and a mixer or a flush valve.

Dedicated Controls is used in installations requiring advanced control and data communication.

Main components of the Dedicated Controls system:

- CU 362 control unit
- IO 351B module (general I/O module).

Dedicated Controls is available either as separate components or as control cabinets.

The control system can be operated by the following devices:

- float switches
- level sensors
- level sensors and safety float switches.

The control cabinet is available for the following pump sizes and starting methods:

- pumps up to and including 9 kW, direct-on-line starting
- pumps up to and including 30 kW, star-delta starting
- pumps up to and including 30 kW, soft starter.

The separate control unit and modules can be built for practically any size of system.



TM06 9422 2317

Fig. 29 Dedicated Controls control cabinet

The DC and DCD control cabinets can be fitted with various units:

- The CU 362 control unit, which is the "brain" of the Dedicated Controls system, is fitted in the cabinet front. CU 362 can be fitted with one of the Grundfos CIM communication modules mentioned below, depending on the monitoring needs or the SCADA system:
  - CIM 200 is a communication module used for the Modbus RTU fieldbus protocol.
  - CIM 250 is a communication module used for GSM/GPRS communication. CIM 250 establishes communication between CU 362 and a SCADA system, thereby allowing the application to be monitored and controlled remotely. This module also offers SMS messaging, for example status and alarm messages.
  - CIM 270 is a communication module for the Grundfos Remote Management system (GRM). CIM 270 establishes communication between CU 362 and GRM, thereby allowing the application to be monitored and controlled remotely.
  - The CIM 050 GENIbus module is fitted in a Grundfos product. CIM 050 enables data transmission between a GENIbus network and a Grundfos product.
  - CIM 500 is a Grundfos communication interface module used for data transmission between an industrial ethernet network and a Grundfos product. CIM 500 communicates with CIU 902.
- I/O 351B is a general I/O module that communicates with CU 362 via GENIbus.
- The MP 204 motor protector (optional), which provides many electrical status values, for instance voltage, current, power, insulation resistance and energy. MP 204 offers better protection of the pumps than a conventional motor protection device.
- CUE or VFD (optional) is either a Grundfos variable frequency drive or a general variable frequency drive. The variable frequency drive offers better pump protection and a more steady flow through the pit pipes so that the pumps are treated well and the energy consumption is kept at a minimum.

For further information, see the data booklet or installation and operating instructions for Dedicated Controls in Grundfos Product Center at www.grundfos.com.

LC and LCD

The Grundfos LC and LCD ranges of level controllers comprise three series with a total of six variants:

- LC and LCD 107 operated by air bells
- LC and LCD 108 operated by float switches
- LC and LCD 110 operated by electrodes
- LC and LCD 115 operated by a pressure transducer.

All controllers are ideally suited for applications requiring up to 11 kW motors for direct-on-line starting.

Features and benefits

- Control of one pump (LC) or two pumps (LCD)
- automatic alternation of operation of two pumps (LCD)
- automatic test run (prevents shaft seals from becoming jammed in the event of long periods of inactivity)
- water hammer protection
- starting delay after power supply failure
- automatic alarm resetting, if required
- automatic restarting, if required
- alarm outputs as NO and NC.



TM04 2360 2408

Fig. 30 LCD 110 for two-pump installations

When an SMS module (optional) is fitted in an LC or LCD controller, it acts as a time recorder for the pumps, and when programmed (using an ordinary mobile phone with text messaging facility), it can send text messages containing "high-level alarm", "general alarm", information about operation and the number of times the pump has started. The SMS module is also available with battery and can thus send text messages that will inform you of power failure and when the power has been restored.

For further information, see the data booklet or installation and operating instructions for the LC and LCD controllers in Grundfos Product Center at www.grundfos.com.

CU 100

The CU 100 control box is designed for the starting, operation and protection of small wastewater pumps.

The control box is available in several variants which can be used for the following pumps:

- single-phase pumps (up to and including 9 A)
- three-phase pumps (up to and including 5 A).

The control box is also suitable for the following functions:

- start/stop by means of a float switch
- manual start/stop.

During manual operation, the pump is started and stopped by means of the on/off switch.

During automatic operation, the float switch will start and stop the pump.

For further information, see the installation and operating instructions for CU 100 in Grundfos Product Center at www.grundfos.com.



TM02 6459 0703

Fig. 31 CU 100

CUE

Grundfos CUE is a complete range of external frequency converters designed for speed control of a wide range of Grundfos pumps.



TM06 9423 2317

Fig. 32 CUE

CUE has a built-in PI controller and offers the same functionality and user-interface as Grundfos S-pumps. CUE solutions can thus be seen as an extension to the S-pump range.

CUE offers the following benefits:

- speed control of pumps up to 250 kW (also pumps installed in potentially explosive environments)
- 2 alarm outputs (C, NO, NC)
- 1 sensor (4-20 mA)
- 2 Pt100 or Pt1000 sensors.

AUTO$_{ADAPT}$ pumps

Grundfos CIU

The Grundfos CIU unit is used as a communication interface between a Grundfos product and a main network. The CIU unit is used as an interface for the following functions:

- configuration of pump parameters required for water level control
- online monitoring of pit and pump values
- manual water level control (forced start/stop)
- obtaining of measured and logged data that are valuable for pump service and pit optimisation.

The CIU unit is designed for use together with Grundfos AUTO$_{ADAPT}$ pumps. Communication can be established with Grundfos GO or by using the main network interface of the CIU unit.

Available CIU units:

- CIU 152 PROFIBUS DP
- CIU 902 (without CIM module)
- CIU 202 Modbus
- CIU 252 GSM, GPRS
- CIU 272 GRM (Grundfos Remote Management).

The CIU unit incorporates one or two modules:

- multipurpose I/O module with I/O functionality, IR communication interface and power line communication
- CIM module (optional).

For further information about the CIM module fitted, see the installation and operating instructions for the CIM module.

If a CIM module is fitted in the CIU unit, the sensors connected to the digital input of the I/O module can be remotely monitored from a centrally located SCADA system.

Grundfos GO

Grundfos GO is designed for wireless IR communication with Grundfos products. Grundfos GO can communicate with the AUTO$_{ADAPT}$ pumps via a CIU unit.

Grundfos GO is to be regarded as an ordinary service and measuring tool and is therefore designed to withstand wear and stress from everyday use.

ADC

The ADC fuse box is designed for the protection of the power supply for small wastewater pumps.



TM06 9424 2317

Fig. 33 ADC

The fuse box enables communication with the following devices:

- Grundfos Remote Management, GRM
- Grundfos GO
- SCADA.

The fuse box can be used with the following systems and devices:

- one-pump installation with or without CIU(1
- two-pump installation with or without CIU(1
- CIU units:
  - CIU 202 Modbus RTU(2
  - CIU 272 GRM(2
  - CIU 902(2
  - CIU 252 GSM complete(2
- optional service socket 230 V(3/50 Hz(2
- optional socket for PC Tool link box(2
- optional fault indicator light mounted on top(2
- optional audio alarm, 100 dB(2.

(1 With CIU unit, a CIM module is needed.
(2 Must be ordered with the control box.
(3 The modules come as two parts and must be assembled.

For further information, see the installation and operating instructions for ADC in Grundfos Product Center at www.grundfos.com.

Name		DC	DCD	LC	LCD	CU 100	AUTO$_{ADAPT}$	CIU
Application								
	One pump	●		●		●	●	●
	Two pumps		●		●		●	●
	Mixer	●	●					
	Backup battery	●	●					
Level sensor								
	Float switches	●	●	●	●	●		●[7]
	Electrodes			●	●			●[7]
	Air bells			●	●			●[7]
	Pressure transducer	●	●	●	●		●[3]	●[7]
	Ultrasonic sensor	●	●					●[7]
	Analog level sensor with safety float switches	●	●					●[7]
Starting method								
	Direct-on-line starting	●	●	●	●	●	●	●
	Star-delta starting	●	●	●	●			
	Soft starter	●	●					
Basic functions								
	Start and stop of pump(s)	●	●	●	●	●	●	●
	Pump alternation		●		●		●	●
	High-level alarm	●	●	●	●		●	●
	Dry-running alarm	●	●	●	●		●	●
	Flow measurement (calculated or via flow sensor)	●	●					
	Pump statistics	●	●				●[4]	●
	Conflicting levels alarm	●	●					
Advanced functions								
	Start and stop delays	●	●	●	●		●	●
	Motor temperature sensor	●	●	●	●		●[4]	●
	Test run/anti-seizing	●	●	●	●		●	●
	Daily emptying (once a day)	●	●					●
	Water-in-oil sensor input	●	●					
Communication								
	SMS messaging	●[2]	●[2]	●[1]	●[1]			●[2]
	SCADA communication GSM/GPRS	●[2]	●[2]					●[5]
User interface								
	Level indication	●	●	●	●			●[6]
	Graphical display	●	●					●[6]
	PC Tool WW Controls	●	●				●	

1) If an SMS module is fitted.
2) If a CIM 252 GSM/GPRS module is fitted in the CU 362.
3) Built-in pressure transducer and dry-running sensor.
4) Built-in, but a Grundfos CIU unit is required to get access to data or setting of parameters.
5) Modbus, GSM, GPRS, SMS and GRM options.
6) If Grundfos GO is used.
7) Inputs for external sensors (NO or NC).

6. Accessories

Pos.	Illustration		Pipe diameter [mm]	Designation	Product number
1		TM04 4605 1709	40	Sleeve	96230763
			50		96230753
			63		96571523
			75		96571527
			90		96571528
			110		91716040
			160		91713754
			200		91712032
2		TM04 4601 1709		Centre drill	91712026
			40	Hole saw, 51 mm	96571532
			50	Hole saw, 60 mm	96571533
			63	Hole saw, 75 mm	96571534
			75	Hole saw, 86 mm	96571535
			90	Hole saw, 102 mm	96571536
			110	Hole saw, 127 mm	91713756
			160	Hole saw, 177 mm	91713755
			200	Hole saw, 212 mm	91712025
3		TM04 4602 1709	Up to DN 65.	Insulation jacket for single-pump installation For frost protection, fit the insulation jacket directly over the pipes and valves.	96571529
			Up to DN 65.	Insulation jacket for two-pump installation For frost protection, fit the insulation jacket directly over the pipes and valves.	96653751
4		TM04 4603 1709	50 mm	Vent pipe package	96571531
			90 mm		98171612
5	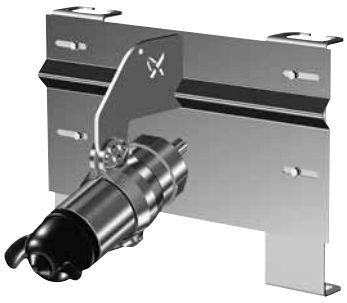	TM06 8858 1317	DN 25	Mixer kit including bracket for AMD.05-08 mixer and 8 m chain. **Note:** Only available for PS.R.17.	99044262
			DN 40		99044290
			DN 50		99044296

Pos.	Illustration	Pipe diameter [mm]	Designation	Product number
6		DN 50 / DN 65	Expansion cone	99134840
		DN 50 / DN 80		99134841
		DN 65 / DN 80		99134842
		DN 65 / DN 100		99135003
		DN 80 / DN 100		99135004
		DN 80 / DN 125		99135005
		DN 100 / DN 125		99135006
		DN 100 / DN 150		99135007
		DN 125 / DN 150		99135008
		DN 125 / DN 200		99135009
		DN 150 / DN 200		99135010
		DN 150 / DN 250		99135011
		DN 200 / DN 250		99135012
		DN 200 / DN 300		99135043
		DN 250 / DN 300		99135044
		DN 250 / DN 350		99135045

TM06 8859 1317

7. Installation

Installation

Local regulations and legal requirements must always be followed. For further information, see the installation and operating instructions for the pumping station.

Installation of pump

Some versions come without the pump installed. For installation and startup of the pump, see the installation and operating instructions for the pump.

Note: The pump must be lowered carefully into the pit in order to avoid damage to pump and pit.

Pipework with flange connections

If the pit is to be installed at temperatures below 0 °C, slacken all flange bolts and retighten them when the pumping station has been installed. In this way, stress in the pipes is prevented.

Fitting the chain

In the case of pumps on auto coupling, we recommend that you fit the chain in the foremost lifting eye of the lifting bracket. When lifting the pump make sure to use a lifting device that is approved for the weight of the pump. Make sure to keep body parts away from a lifted pump.

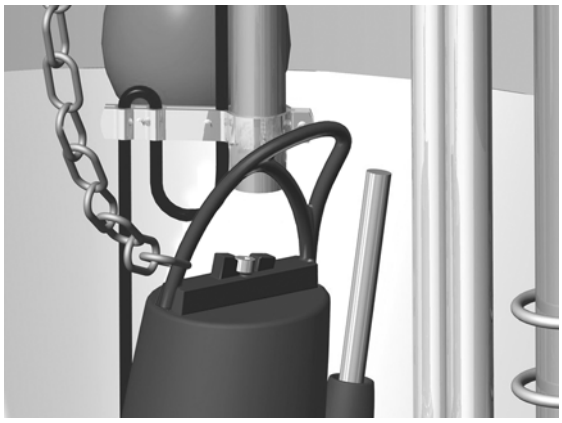

TM02 9341 2514

Fig. 34 Chain fitted to pump

Installation of level controller

See the installation and operating instructions of the controller.

Location of the inlet

The pit inlet must not be located within the area shown in fig. 35 as the inflow of liquid will disturb the function of the float switches.

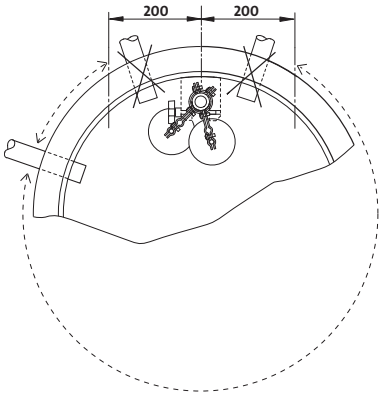

TM02 8961 1204

Fig. 35 Location of inlet, D500-D1200

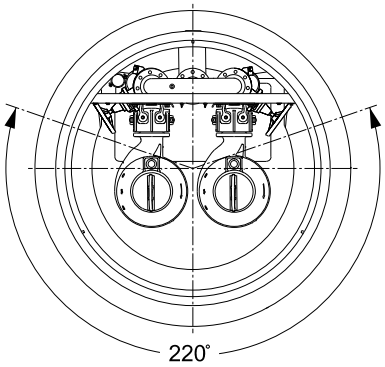

TM05 3261 1012

Fig. 36 Location of inlet, D1700

Startup

See the installation and operating instructions of the pump and the controller, respectively.

Note: The controller must not be installed in the pit.

Maintenance

See the installation and operating instructions of the pump and the controller, respectively.

It is important that the pit cover is properly secured so that unauthorised persons cannot remove it.

8. Technical data

Starting frequency

In a pumping station, the total water volume consists of the volume below the lowest pump stop level and the effective volume above this level. The effective volume varies with pump usage and the incoming flow rate. The starting frequency of the pumps depends on the effective volume available and the incoming flow rate.

The starting frequency Z is a function of the ratio between Q_{in}/Q and V_h.

Q_{in} = incoming flow rate [l/s]
Q = pump performance [l/s]
V_h = accumulated (effective) volume between start and stop [m^3].

Note: If the maximum incoming flow rate is equal to the pump performance, the pump will be running permanently.

Z_{max}: maximum number of starts per hour.

$$Z_{max} = \frac{Q \times 3.6}{4 \times V_h}$$

V_h: necessary, minimum accumulated volume between start and stop.

$$V_h = \frac{Q \times 3.6}{4 \times Z_{max}}$$

Sump volume

In installations where the expected maximum incoming flow rate, Q_{in}, is less than 60 % of the selected pump performance, the accumulated sump volume must be calculated in such a way that there will be at least two pump starts a day in order to prevent sedimentation in the sump.

The following drawings show values of empty pits without pump, pipe, etc.

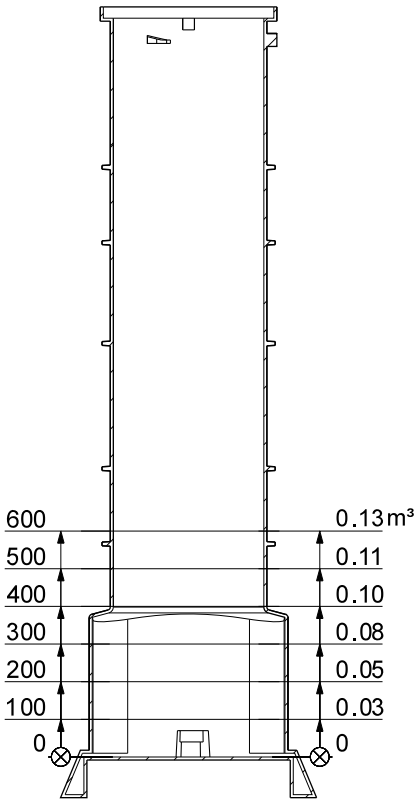

Fig. 37 Effective volume in relation to level, PS.R.05

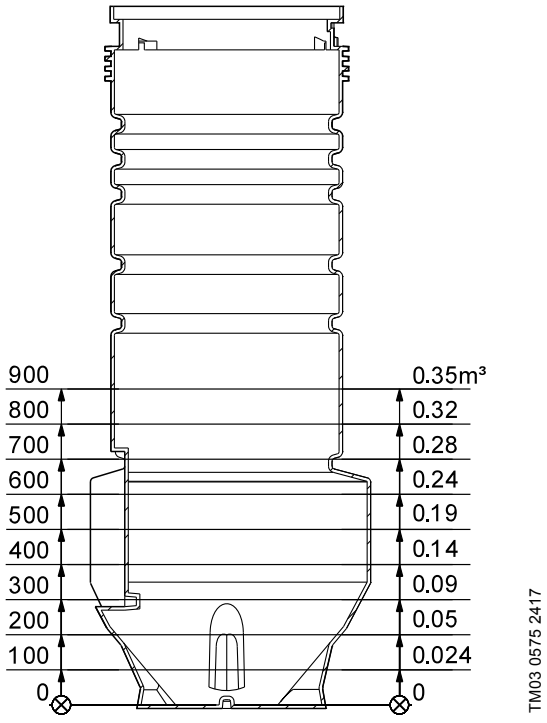

Fig. 38 Effective volume in relation to level, PS.R.08

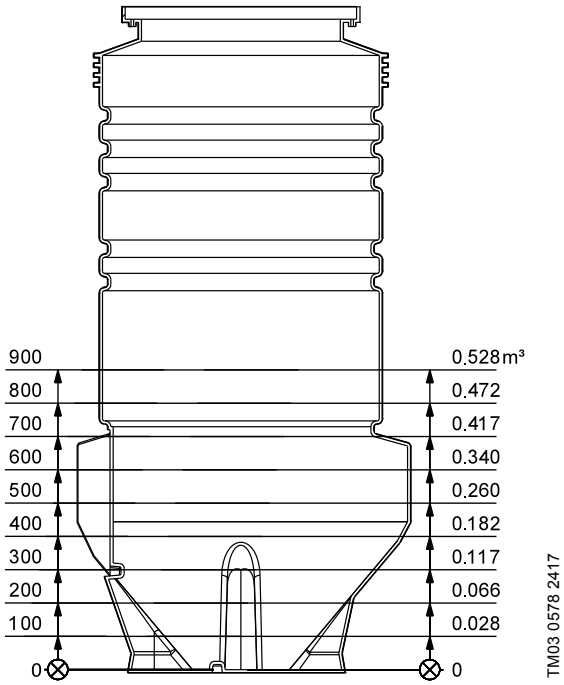

Fig. 39 Effective volume in relation to level, PS.R.10

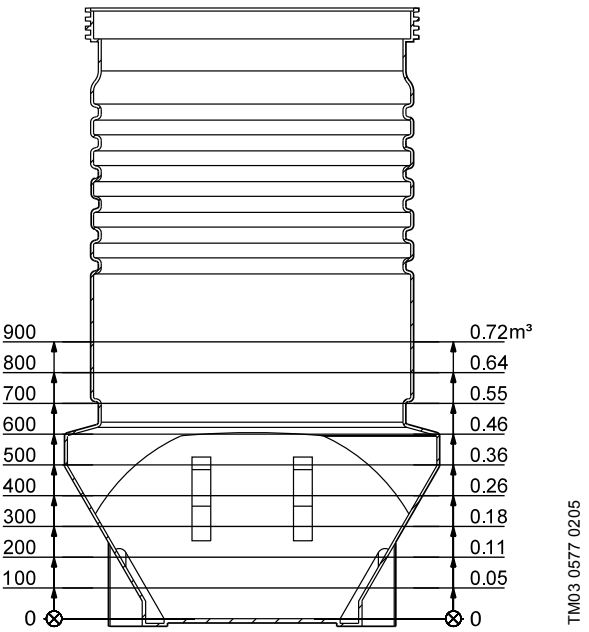

Fig. 41 Effective volume in relation to level, PS.R.12 (two pumps)

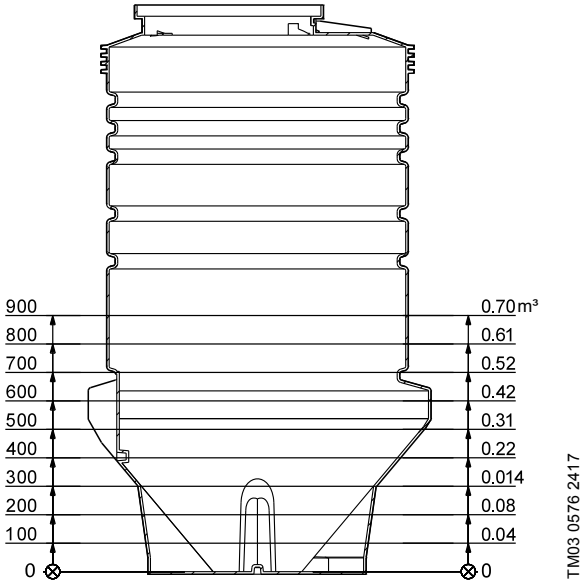

Fig. 40 Effective volume in relation to level, PS.R.12 (one pump)

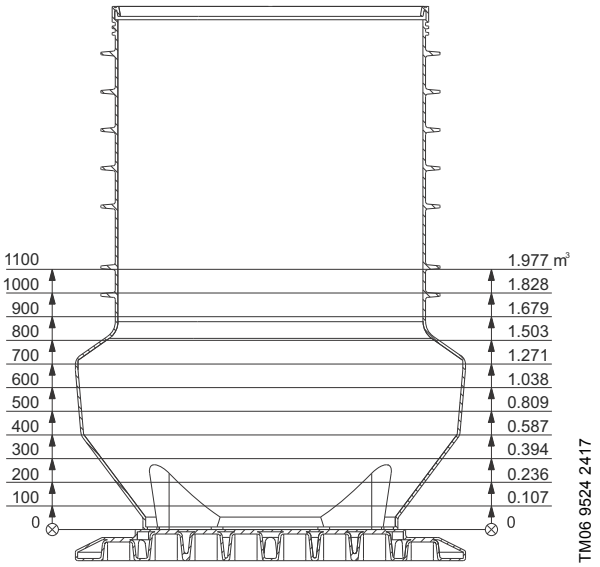

Fig. 42 Effective volume in relation to level, PS.R.17

Dimensions and weights

Pit dimensions

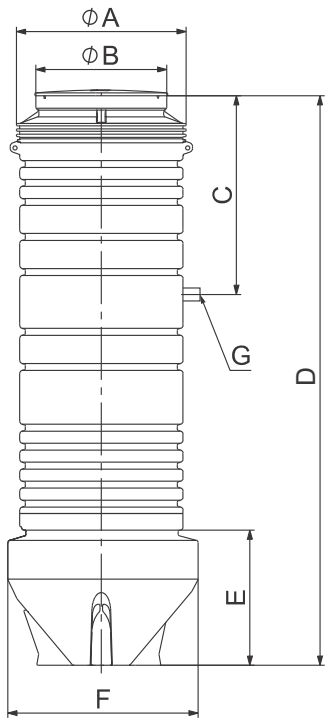

Fig. 43 Dimensional sketch

Note: Tolerances for PE material are ± 3 %.

Pit	ØA [mm]	ØB [mm]	C [mm]	D Total height [mm]	E [mm]	F [mm]	G [mm]
D500	400	400	1000	2000	390	528	DN 40
D800	694	590	1000	2000	690	820	DN 50
				2500			
				3000			
D1000	894	590		1500	690	1020	DN 50
				2000			
				2500			
				3000			
D1200S	1094	590	*	2000	690	1220	DN 50 / DN 65
				2500			
				3000			
D1200D	1094	980		2000	690	1220	DN 50 / DN 65
				2500			
				3000			
D1700	1430	1355		2000-6000	1075	1760	DN 50 - DN 100

* Varies from pit to pit. Contact Grundfos for the dimensions.

Pit weights

Pit	Maximum weight [kg]
D500	45
D800	157
D1000	186
D1200S	270
D1200D	312
D1700	1000

Valve chamber dimensions

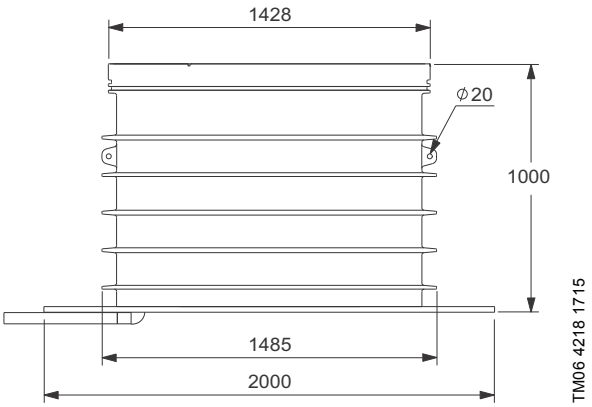

Fig. 44 Valve chamber, 1 metre

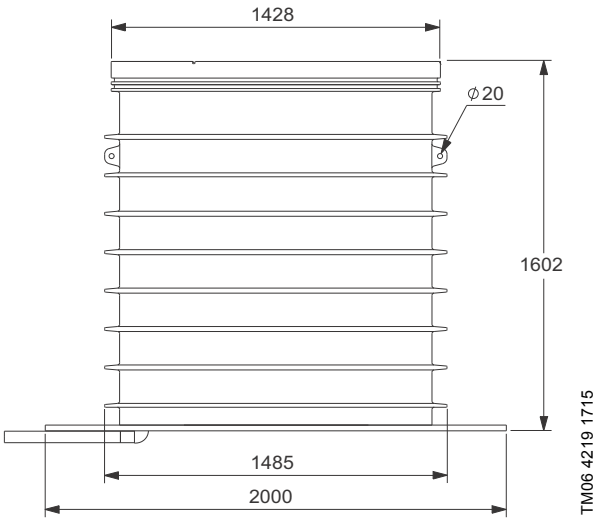

Fig. 45 Valve chamber, 1.6 metres

Valve chamber weights

Valve chamber	Maximum weight [kg]
1 metre	349
1.6 metres	390

9. Grundfos Product Center

Online search and sizing tool to help you make the right choice.

http://product-selection.grundfos.com



"SIZING" enables you to size a pump based on entered data and selection choices.

"REPLACEMENT" enables you to find a replacement product.
Search results will include information on the following:
- the lowest purchase price
- the lowest energy consumption
- the lowest total life cycle cost.

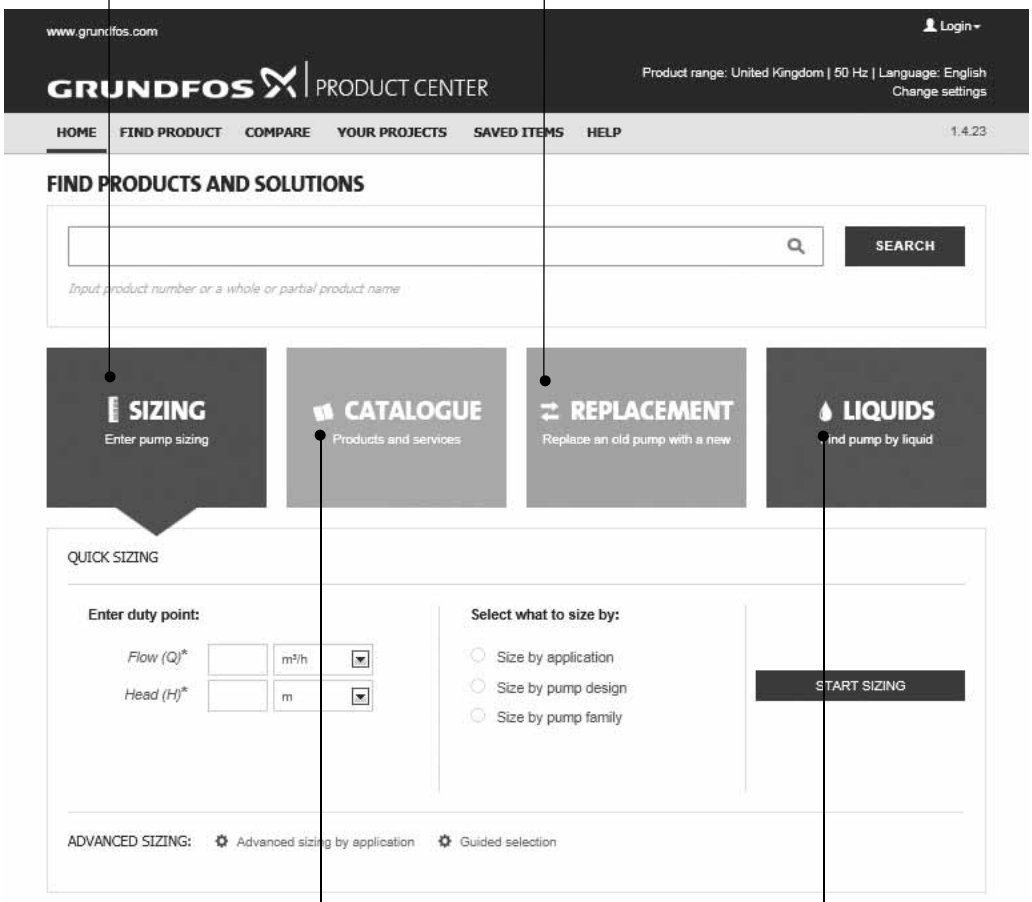

"CATALOGUE" gives you access to the Grundfos product catalogue.

"LIQUIDS" enables you to find pumps designed for aggressive, flammable or other special liquids.

All the information you need in one place

Performance curves, technical specifications, pictures, dimensional drawings, motor curves, wiring diagrams, spare parts, service kits, 3D drawings, documents, system parts. The Product Center displays any recent and saved items - including complete projects - right on the main page.

Downloads

On the product pages, you can download installation and operating instructions, data booklets, service instructions, etc. in PDF format.

Subject to alterations.

be think innovate

© Copyright Grundfos Holding A/S

The name Grundfos, the Grundfos logo, and **be think innovate** are registered trademarks owned by Grundfos Holding A/S or Grundfos A/S, Denmark. All rights reserved worldwide.

96975196 0617
ECM: 1206235

GRUNDFOS A/S
DK-8850 Bjerringbro . Denmark
Telephone: +45 87 50 14 00
www.grundfos.com

GRUNDFOS