SCALA

Multistage centrifugal boosters, 50/60 Hz



be
think
innovate

GRUNDFOS

Table of contents

1. Product introduction 3
Features and benefits 3
Applications 3
Pumped liquids 3
Product range 5
Performance range 5

2. Selection guide 6

3. Installation and operation 7
Mechanical installation 7
Installation examples 9
Electrical connection 10
Motor protection 11

4. SCALA1 12
Product range 12
Motor 12
Features and benefits of SCALA1 12
Protection features 12
Performance curves 13
Technical data 15
Approvals and markings 18
Suction performance 19

5. SCALA1 twin booster system 20
Features and benefits 20
Protection features 20
Operation modes 20
Performance curves 21
Technical data 22

6. SCALA2 23
Motor 23
Features and benefits of SCALA2 23
Protection features 23
Performance curves 24
Technical data 25
Approvals and markings 27
Suction performance 27

7. Accessories 28
SCALA twin accessory set 28
Inlet filter 29

8. Product numbers 30
SCALA1 30
SCALA2 32

9. Grundfos Product Center 33

1. Product introduction



TM075413

Left to right: SCALA1, SCALA2

Grundfos SCALA pumps are all-in-one integrated pressure boosters designed for domestic use and ensure a constant supply of clean water to households, gardens and light commercial applications.

SCALA1

Grundfos SCALA1 is a self-priming, multistage pump, which combines all the components of a pressure booster into a compact composite enclosure.

SCALA1 can communicate with Grundfos GO Remote app through a built-in Bluetooth technology, which enables high customization options, making this pump a good fit for every application.

SCALA2

Grundfos SCALA2 is a fully integrated, self-priming, compact waterworks for pressure boosting in domestic applications.

SCALA2 incorporates integrated speed control which allows maintaining a perfect pressure in the taps. This means that the pump performance will adjust to the the increasing demand.

Features and benefits

General benefits of SCALA pumps:

- Easy installation.
- Easy commission.
- Easy operation.

Features	SCALA1	SCALA2
Auto start-stop	√	√
Self-priming	√	√
Alarm indication	√	√
Dry-run protection	√	√
Anti-cycling protection	√	√
Maximum runtime protection	√	√
Bluetooth communication	√	-
Twin enabled	√	-
External input	√	-
Adjustable constant pressure	-	√
Integrated frequency converter	-	√
Low noise	55 dB(A)	47 dB(A)

Applications

The SCALA boosters are suitable for domestic and light commercial water supply, where pressure boosting is required.

We recommend SCALA pumps for the following applications:

- pressure boosting of city mains water
- pressure boosting of water from roof tank
- pressure boosting of water from break tank
- pressure boosting of water from ground tank
- water supply from shallow wells (8 m)
- garden irrigation
- water transfer.

Depending on the application needs and required comfort, one pump can be a better fit than the other.

Pumped liquids



DANGER
Explosion risk
Death or serious personal injury
- Do not use the product for flammable liquids such as diesel oil, petrol or similar liquids. The product must only be used for water.



WARNING
Electric shock
Death or serious personal injury
- Do not use the product for aggressive liquids. The product must only be used for water.



WARNING
Toxic material
Death or serious personal injury
- Do not use the product for toxic liquids. The product must only be used for water.

If the water contains sand, gravel or other debris, there is a risk of pump blockage and pump damage. Install a filter on the inlet side or apply a floating strainer to protect the pump.

The product is suitable for pumping clean, thin, non-aggressive and non-explosive liquids without solid particles or fibres.

The product is designed for fresh water with a maximum chloride content of 300 ppm and a free chlorine content below 1 ppm.

Examples of liquids:

- drinking water
- rainwater.

Product range

Pump type	Nominal flow rate m^3/h	Max. head [m]
SCALA1 3-25	3	25
SCALA1 3-35	3	35
SCALA1 3-45	3	45
SCALA1 5-25	5	25
SCALA1 5-55	5	55
SCALA2 3-45	3	45

Performance range

The performance curves show the range of the SCALA pumps.

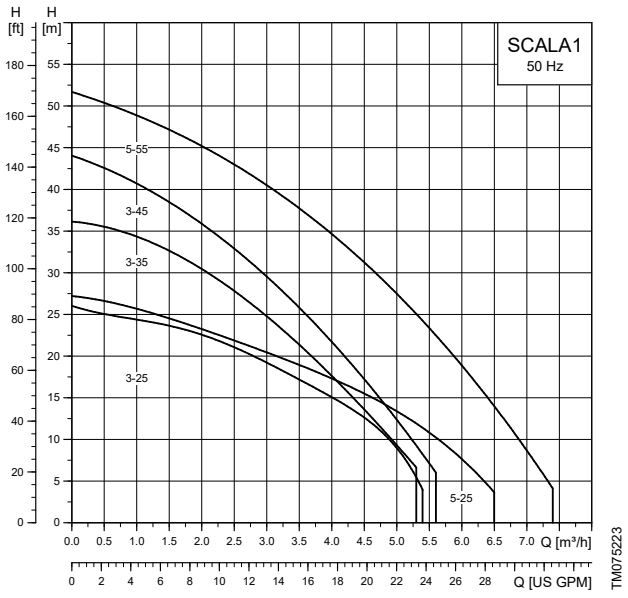

Performance range, SCALA1 50 Hz

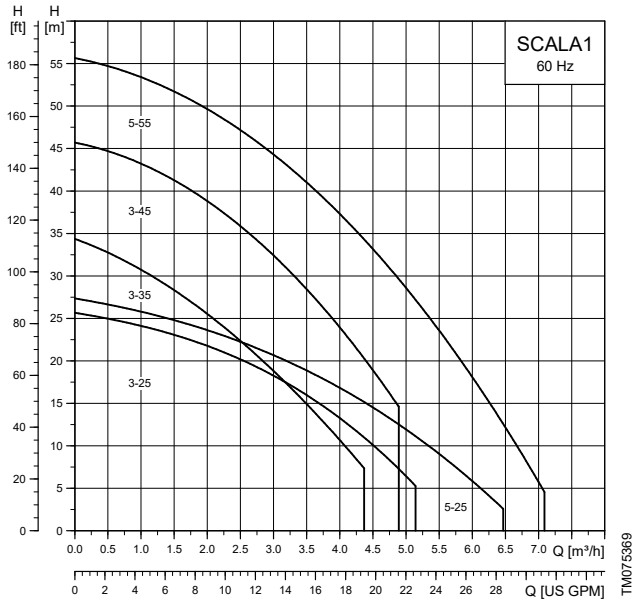

Performance range, SCALA1 60 Hz

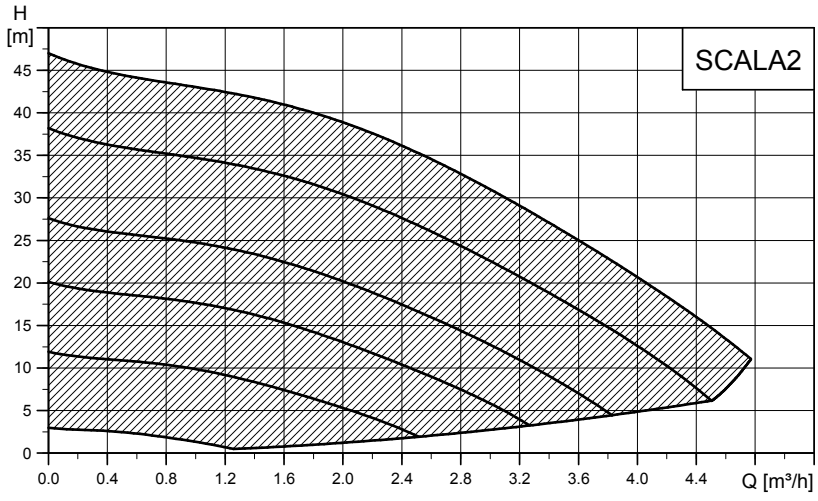

Performance range, SCALA2 50/60 Hz

2. Selection guide

This guide helps you to size and select the most suitable SCALA product.
Follow the instructions below to determine which product variant is best suited to your needs.

1. Choose the right pump for your application.

Application	Pump	Suitability rating			Recommendation
City water mains	SCALA1	●	●		
	SCALA2	●	●	●	Due to integrated frequency converter, SCALA2 can adapt the speed to varying water pressure in the city mains, delivering constant pressure in all taps any time. PN10 rating ensures robustness towards maximum system pressure.
Shallow well	SCALA1	●	●	●	SCALA1 construction offers better suction capabilities with different modes to handle air.
	SCALA2	●	●		
Water storage tank (above ground level)	SCALA1	●	●		
	SCALA2	●	●	●	Adjustable constant pressure for SCALA2 enables user to select the desired pressure for the entire home, and thus avoids overpressure.
Water storage tank (below ground level)	SCALA1	●	●	●	SCALA1 construction offers better suction capabilities with different modes to handle air.
	SCALA2	●	●		
Roof tank	SCALA1	●	●		
	SCALA2	●	●	●	Adjustable constant pressure for SCALA2 enables user to select the desired pressure for the entire home and thus avoids overpressure.
Water transfer	SCALA1	●	●	●	External input and fixed speed in SCALA1 will make sure water is transferred as quickly as possible from point A to B, when needed.
	SCALA2	●			
Garden irrigation	SCALA1	●	●	●	External input and calendar function are a perfect combination for irrigation purposes.
	SCALA2	●			
Kitchen	SCALA1	●	●		
	SCALA2	●	●	●	SCALA2 delivers constant pressure to all taps regardless of the inlet pressure.
Bathroom	SCALA1	●	●		
	SCALA2	●	●	●	SCALA2 delivers constant pressure to all taps regardless of the inlet pressure.

2. Size your pump.

Number of floors	1-5 taps	6-10 taps	11-20 taps	21-50 taps
4	SCALA1 3-45 or SCALA2 3-45	SCALA1 5-55	SCALA1 Twin 5-55	SCALA1 Twin 5-55
3	SCALA1 3-45 or SCALA2 3-45	SCALA1 3-45 or SCALA2 3-45	SCALA1 5-55	SCALA1 Twin 5-55
2	SCALA1 3-35 or SCALA2 3-45	SCALA1 3-45 or SCALA2 3-45	SCALA1 5-55	SCALA1 Twin 5-55
1	SCALA1 3-25 or SCALA2 3-45	SCALA1 3-35 or SCALA2 3-45	SCALA1 3-45 or SCALA2 3-45	SCALA1 Twin 5-55

Preconditions:

- A tap pressure of 3 bar is considered. To achieve pressure of 4 bar, add two floors.
- The inlet is flooded. For suction operation, add a floor for every 3 meters of suction depth.
- A tap flow between 9 and 12 l/min average usage and half of the taps opened at the same time will be considered.

3. Installation and operation

Mechanical installation

Placing the pump above ground is generally a convenient way to establish water or rainwater supply. The pump can be installed both indoors and outdoors.

The product should be placed as close as possible to the liquid to be pumped to minimize the length of the inlet pipe. The motor is water-cooled, but we still recommend a clearance of 0.5 m on three sides of the product.

The product should be fastened to a solid horizontal foundation with a maximum inclination angle of ± 5 °. The base plate must be facing downwards.

If the pump is used for pumping rainwater or well water, we recommend installing a filter on the inlet side to protect the pump from sand, gravel or other debris. If the pump is installed above the liquid level, we recommend fitting a foot valve with a strainer to the inlet pipe.

Pipe system

To obtain the optimum suction capacity which the dry-installed pump is designed for, the correct dimension of the pipe system is important. If a hose is used as inlet pipe, it must be non-collapsible.

The diameter of the inlet pipe must be larger than 1", if the inlet pipe is longer than 10 m, or if the suction lift exceeds 4 m.

Inlet pipe length and suction lift

The length of the inlet pipe of self-priming pumps depends on the geodetic suction lift. The recommended maximum length of the inlet pipe according to the suction lift is shown in the figure below. The example shows that if the suction lift is 2.5 m, the length of the inlet pipe must not exceed 25 m.

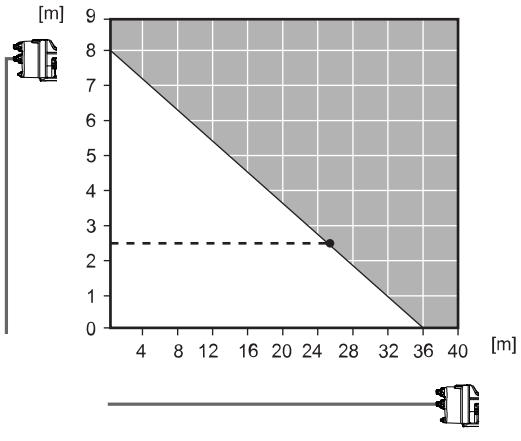

Maximum inlet pipe length (horizontal axis) according to the suction lift (vertical axis)

Inlet and outlet pipes

Follow these general precautions when connecting the inlet and outlet pipes.

Do not let the pump support the pipes. Use pipe hangers or other supports at proper intervals to provide pipe support near the pump.

The internal diameter of the pipes must never be smaller than the diameter of the pump ports.

- Install the pipes so that air pockets are avoided, especially on the inlet side of the pump.
- Use eccentric reducers with the tapered side down.
- Make sure the pipes are as straight as possible to avoid unnecessary bends and fittings. We recommend long-radius 90 ° pipe bends to decrease friction loss.
- Run the inlet pipe as direct as possible and, ideally, make sure that the length is at least ten times the pipe diameter.
- If possible, run a horizontal inlet line. We recommend a gradual upward slope for pumps operating in suction-lift conditions.
- A short pipe must be of the same diameter as the inlet port or larger.
- A long pipe must be one or two sizes larger than the inlet port, depending on the length.

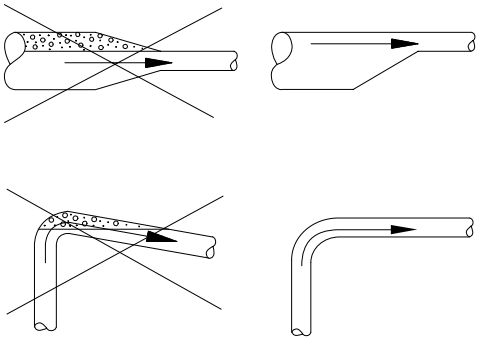

Recommended pipe installation to avoid friction and air pockets

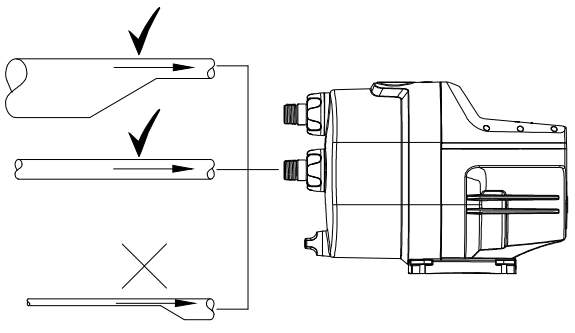

Correct pipe sizing for connection to the pump inlet or outlet

Maximum system pressure

Make sure that the system in which the pump is installed is designed for the maximum pump pressure.

The maximum inlet pressure depends on the head at the actual duty point. The sum of the inlet pressure and the head must not exceed the maximum system pressure.

We recommend installing a pressure-relief valve to protect the pump so that the outlet pressure does not exceed the maximum system pressure.

Installation examples

We recommend that you follow the installation examples. Valves are not supplied with the pump.

Suction from a well

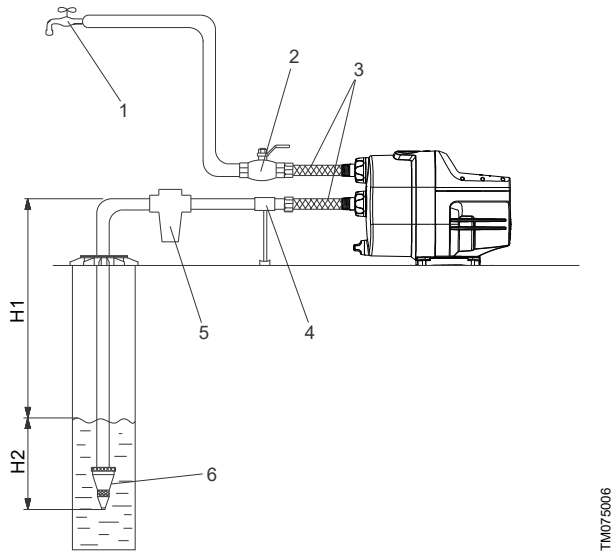

Pos.	Description
1	Highest tapping point
2	Isolating valve
3	Flexible hoses
4	Pipe support
5	Inlet filter
6	Foot valve with strainer
H1	Maximum suction lift: 8 m
H2	Inlet pipe must be submerged at least 0.5 m

Suction from a tank

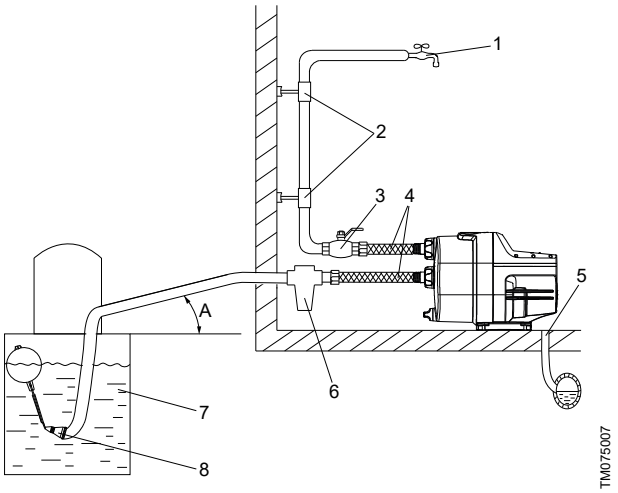

Pos.	Description
1	Highest tapping point
2	Pipe hangers
3	Isolating valve
4	Flexible hoses
5	Drain to sewer
6	Inlet filter
7	Freshwater tank
8	Foot valve with strainer
9	Minimum 1-degree inclination

Mains water pressure boosting

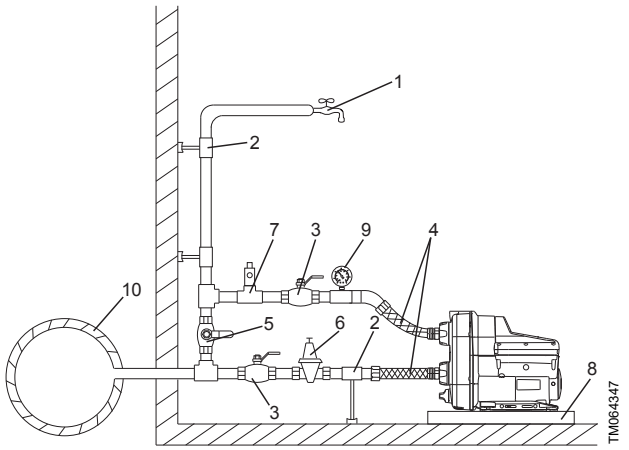

Mains water pressure boosting, SCALA2

Pos.	Description
1	Highest tapping point
2	Pipe hangers and supports
3	Isolating valves
4	Flexible hoses
5	Bypass valve
6	Optional pressure-reducing valve on the inlet side if the pressure can exceed 10 bar (145 psi).
7	Optional pressure-relief valve on the outlet side if the installation cannot withstand a pressure of 6 bar (87 psi).
8	Drip tray. Install the pump on a small stand to prevent the ventilation holes from being flooded.
9	Pressure gauge
10	Mains water pipe

Roof tank filling

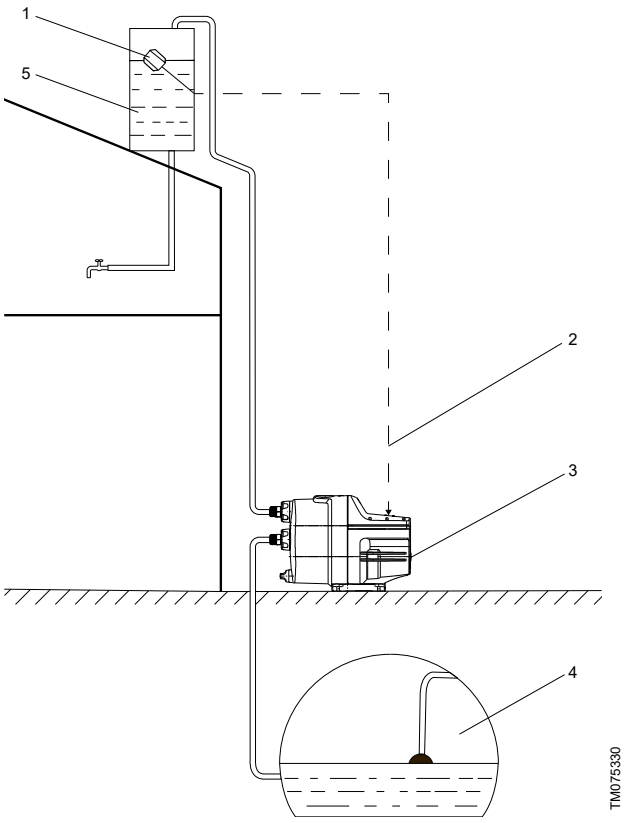

Pos.	Description
1	Float switch
2	External input (switch) cable
3	Pump
4	Water source (tank)
5	Roof tank

Electrical connection

The electrical connection and protection must be carried out in accordance with local regulations. Please also observe the following requirements:

- Make sure that the pump and pressure-control unit are suitable for the power supply to which they are to be connected.
- Make sure that the pump is suitable for the power supply to which they are to be connected.
- The pump and pressure-control unit must always be correctly earthed.
- The pump must always be correctly earthed.
- The plug on the pump must have the same protective earth (PE) connection system as the power outlet. If not, use a suitable adapter if allowed by local regulations.
- A pump without plug must be connected to an external main switch or wired with a plug.

Motor protection

The pump incorporates current- and temperature-dependent motor protection. If the pump is blocked or otherwise overloaded, the built-in thermal switch will cut out. When the motor has cooled sufficiently, it will restart automatically.

No external motor protection is required.

4. SCALA1



TM075390

SCALA1 pump

Grundfos SCALA1 is a self-priming, multistage pump, which combines all of the components of a pressure booster into a compact composite enclosure.

SCALA1 can communicate with the Grundfos GO Remote app through a built-in Bluetooth technology, which enables high customization options, making this pump a good fit for every application.

Product range

Pump type	Nominal flow rate m^3/h	Max. head [m]
SCALA1 3-25	3	25
SCALA1 3-35	3	35
SCALA1 3-45	3	45
SCALA1 5-25	5	25
SCALA1 5-55	5	55

Motor

The motor is water-cooled and equipped with sealed, greased-for-life ball bearings to ensure silent operation and minimum service. The motor has a built-in thermal switch and requires no additional motor protection.

Features and benefits of SCALA1

- Water on demand.
- All-in-one integrated booster.
- Bluetooth communication.
- External input.
- Twin booster enabled.
- Low noise level < 55 dB(A).

Self-priming

A self-priming pump ensures a stable operation, even if the pump is not fully filled with liquid. The self-priming pump is able to lift liquid from below the inlet level and handle a mix of air and liquid until the pump reaches a fully-primed pumping condition.

Robust design

The pump is designed for long and trouble-free operation. Composite construction combined with excellent corrosion-resistant internal components ensure high robustness in operation.

Easy installation

SCALA pumps can be installed in three easy steps:

- Connecting the pipes.
- Priming the pump.
- Plugging the pump into a power outlet.

The pump will start running after it has been plugged into a power outlet.

Protection features

Dry-running protection

The product incorporates dry-running protection that automatically stops the pump from running without liquid. Dry-running protection means less risk of pump damage and lower maintenance costs.

Anti-cycling function

The anti-cycling function prevents the product from starting and stopping too often in case of a minor leakage in the system or if a tap has not been closed completely. The anti-cycling function will stop the pump, and an alarm will be indicated.

Maximum runtime

The maximum runtime function is a timer that can turn the pump off if it runs continuously for a certain amount of time. This time period is adjustable via Grundfos GO Remote app.

Performance curves

50 Hz

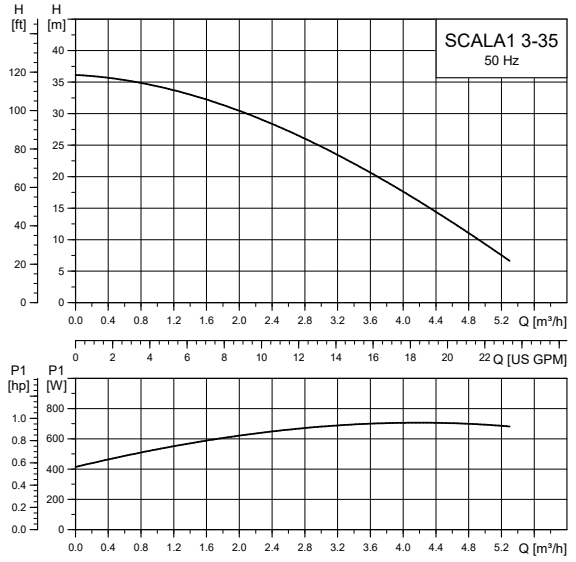

TM075219

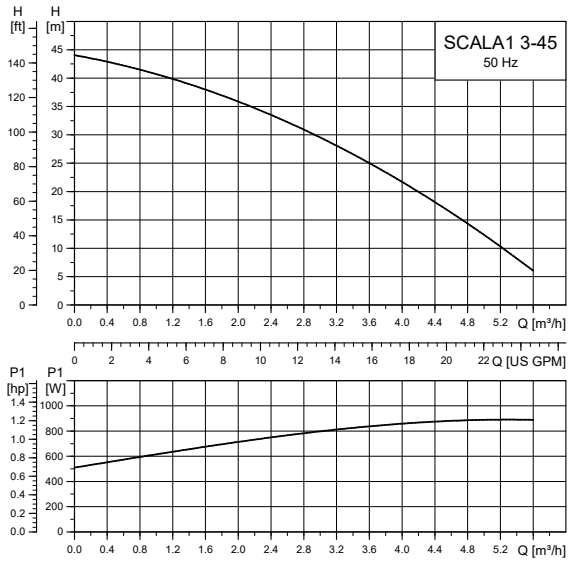

TM075220

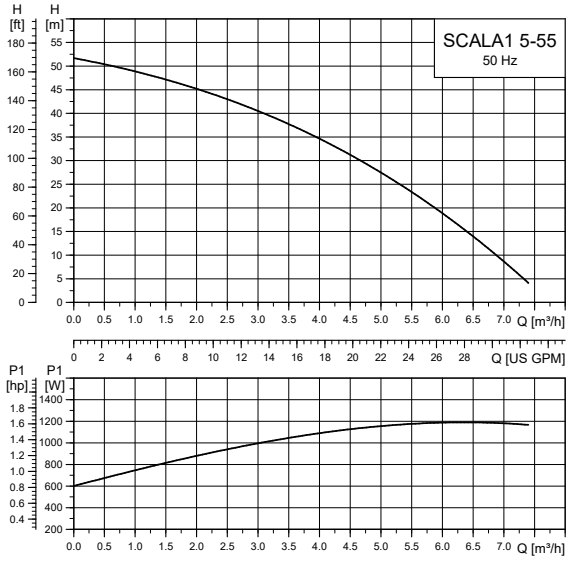

TM075222

60 Hz

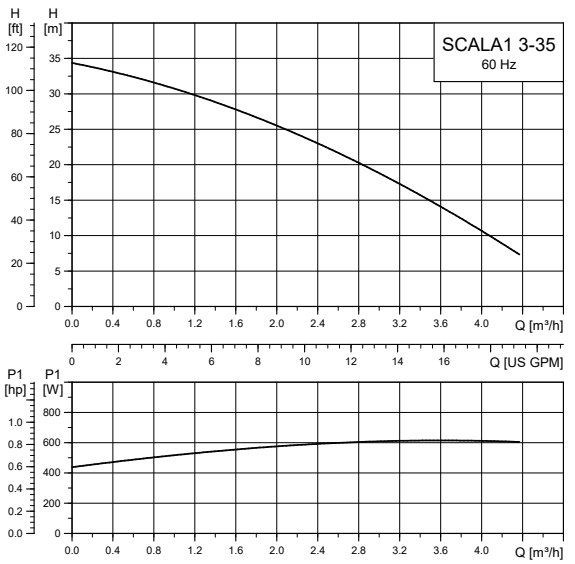

TM075365

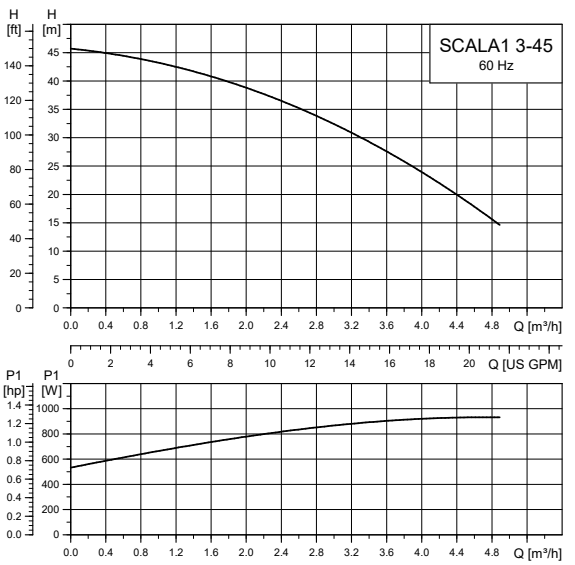

TM075366

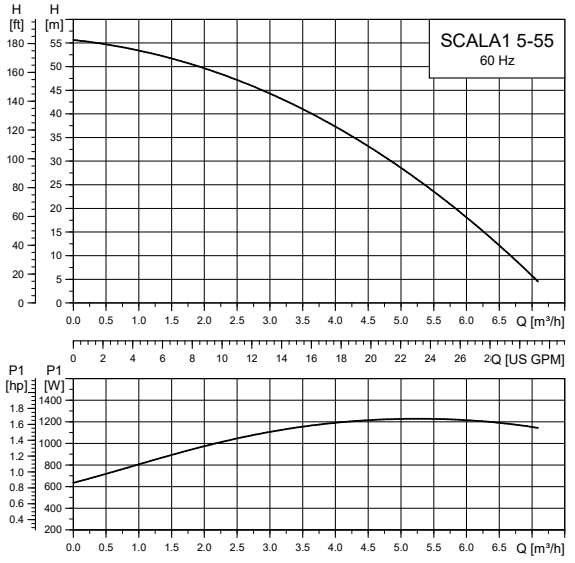

TM075368

50 Hz

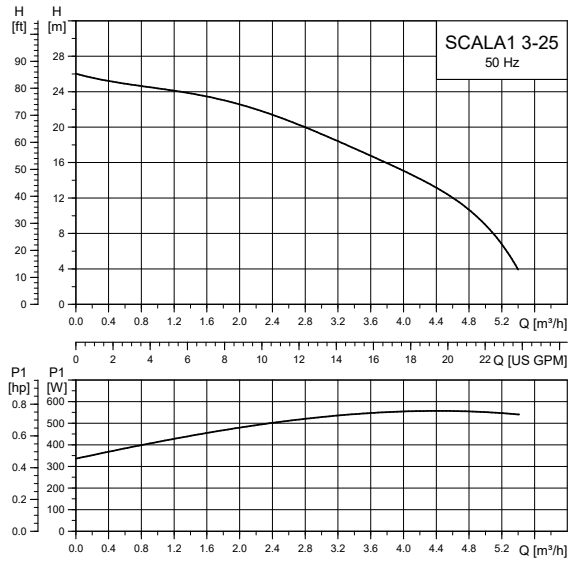

TM075218

60 Hz

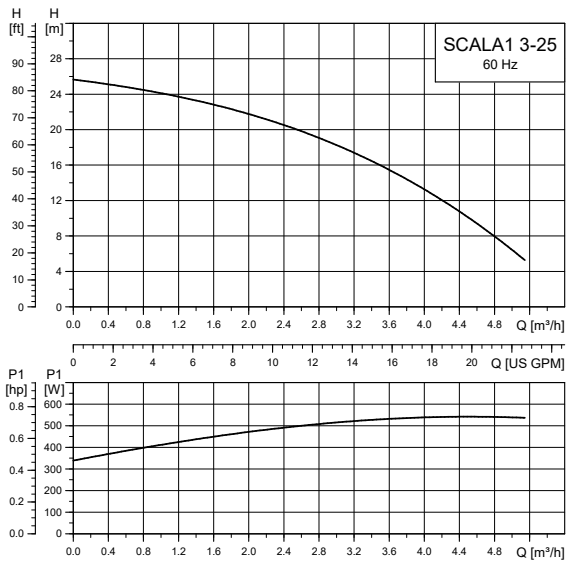

TM075364

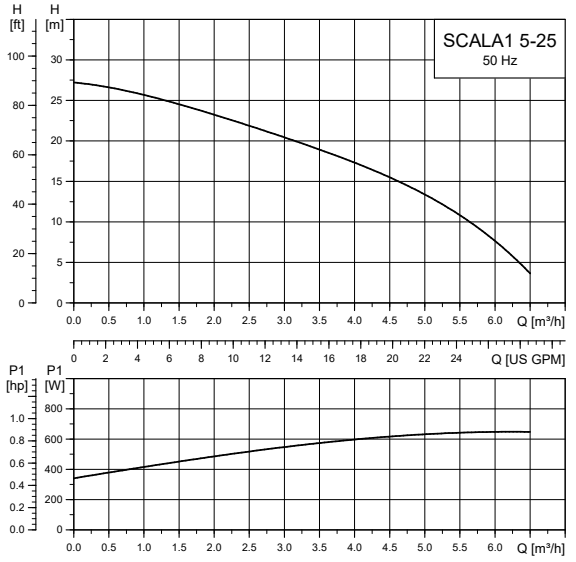

TM075221

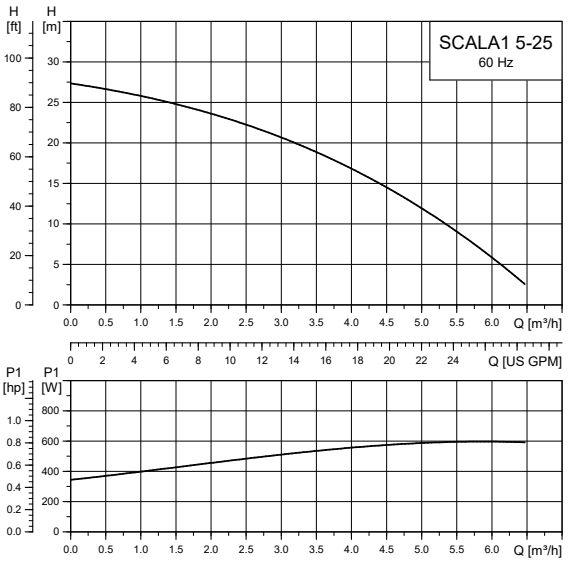

TM075367

Technical data

Dimensions and weights

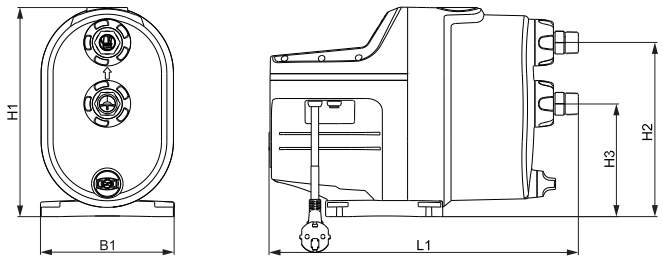

TM075267

Pos.	H1 [mm] [inch]	H2 [mm] [inch]	H3 [mm] [inch]	L1 [mm] [inch]	B1 [mm] [inch]
SCALA1 (all variants)	316 12.4	263 10.4	171 6.7	466 18.4	202 8.0

Weight

SCALA1 3-25 [kg] [lb]	SCALA1 3-35 [kg] [lb]	SCALA1 3-45 [kg] [lb]	SCALA1 5-25 [kg] [lb]	SCALA1 5-25 [kg] [lb]
11 24.2	12 26.4	12 26.4	12 26.4	14 30.8

Operating conditions

	SCALA1				
	3-25	**3-35**	**3-45**	**5-25**	**5-55**
Max. ambient temperature	55 °C (131 °F)	55 °C (131 °F)	55 °C (131 °F)	55 °C (131 °F)	55 °C (131 °F)
Max. liquid temperature	45 °C (113 °F)	45 °C (113 °F)	45 °C (113 °F)	45 °C (113 °F)	45 °C (113 °F)
Maximum system pressure [bar (psi)]	8 (116)	8 (116)	8 (116)	8 (116)	8 (116)
Maximum inlet pressure [bar (psi)]	5 (72.5)	4 (58)	3 (43.5)	5 (72.5)	2 (29)
Max. head [m (ft)] 50 Hz	25 (82)	36 (118.1)	44 (144.3)	26 (85.3)	52 (170.6)
Max. head [m (ft)] 60 Hz	25 (82)	35 (114.8)	51 (167.3)	27 (85.3)	53 (173.8)
Nominal head [m (ft)]	15 (49.2)	20 (65.6)	25 (82)	15 (49.2)	25 (82)
Nominal flow [m^3/h (gpm)]	3.00 (12.19)	3.72 (16.38)	3.59 (15.80)	4.80 (21.12)	5.33 (23.48)
IP Rating	X4D	X4D	X4D	X4D	X4D
Pumped liquid	Clean water	Clean water	Clean water	Clean water	Clean water
Noise level [db(A)]	< 55	< 55	< 55	< 55	< 55
Frequency of starts and stops	25 per hour	25 per hour	25 per hour	25 per hour	25 per hour
Start pressure (pstart) [bar (psi)]	1.2 (17.4)	1.5 (21.8)	2.2 (31.9)	1.2 (17.4)	2.8 (40.6)

Electrical data

All variants have insulation class F.

50 Hz

Pump type	Voltage [V]	P1 [W (hp)]	P2 [W (hp)]	n [rpm]	I_n [A]	I_{start} [A]	Standby power [W]
SCALA1 3-25	1 x 230	550 (0.74)	360 (0.50)	2850	2.58	13.0	1.5
SCALA1 3-35	1 x 230	720 (0.97)	450 (0.60)	2800	3.27	13.0	1.5
SCALA1 3-45	1 x 230	910 (1.23)	580 (0.80)	2800	4.10	17.0	1.5
SCALA1 5-25	1 x 230	650 (0.88)	425 (0.60)	2850	3.00	13.0	1.5
SCALA1 5-55	1 x 230	1200 (1.62)	780 (1.00)	2850	5.38	26.0	1.5

60 Hz

Pump type	Voltage [V]	P1 [W (hp)]	P2 [W (hp)]	n [rpm]	I_n [A]	I_{start} [A]	Standby power [W]
SCALA1 3-25	1 x 230	540 (0.72)	350 (0.50)	3450	2.37	13.0	1.5
	1 x 115	560 (0.75)	350 (0.50)	3450	5.10	29.5	1.5
SCALA1 3-35	1 x 230	650 (0.88)	470 (0.60)	3400	2.76	13.0	1.5
	1 x 115	650 (0.88)	470 (0.60)	3400	5.71	29.5	1.5
SCALA1 3-45	1 x 230	870 (1.17)	570 (0.80)	3350	3.72	15.5	1.5
	1 x 115	950 (1.28)	590 (0.80)	3400	8.62	40.0	1.5
SCALA1 5-25	1 x 230	600 (0.80)	420 (0.60)	3450	2.60	13.0	1.5
	1 x 115	610 (0.82)	450 (0.60)	3450	5.70	29.5	1.5
SCALA1 5-55	1 x 230	1250 (1.68)	810 (1.10)	3450	5.25	22.5	1.5
	1 x 115	1250 (1.68)	860 (1.10)	3450	11.57	64.0	1.5

Construction of SCALA1

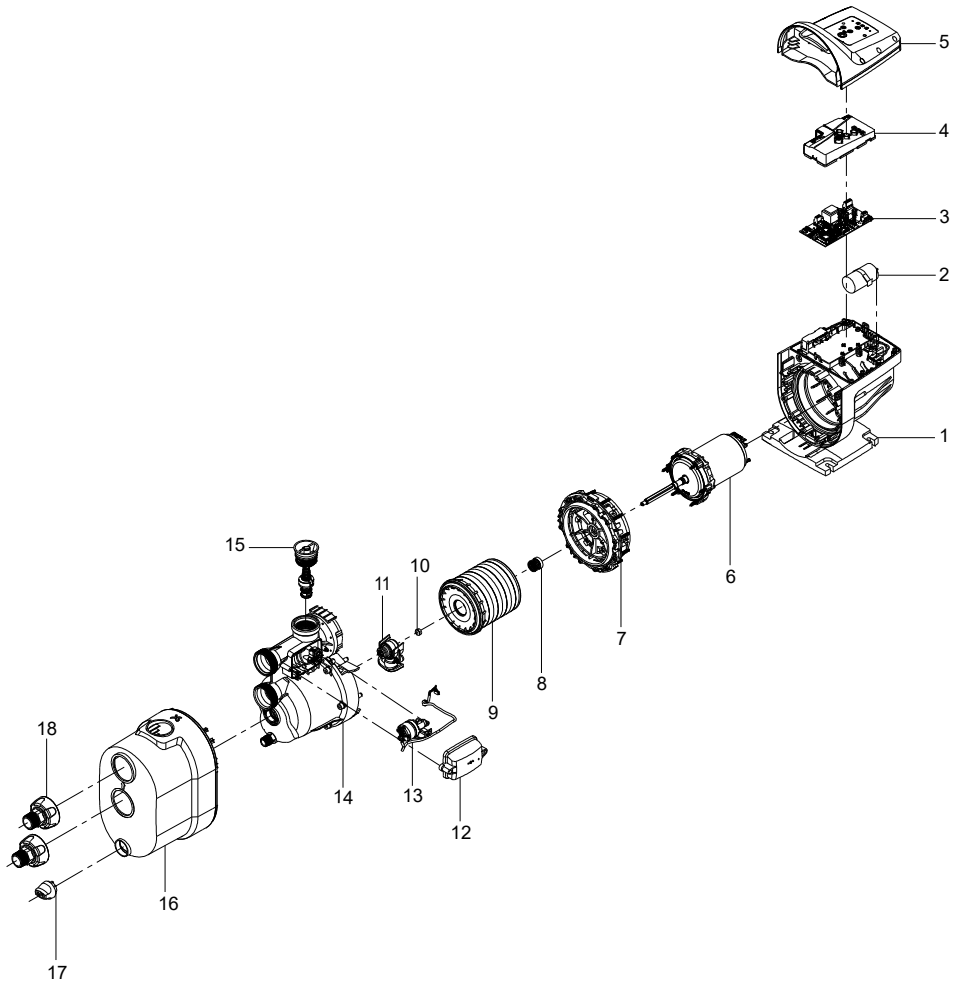

Exploded view of SCALA1

Material specification

Pos.	Component	Material
1	Combined pump and stator housing	Composite
4	PCB cover	Composite
5	Cover for control box	Composite
7	Motor flange	Composite
8	Shaft seal, complete	Carbon/Ceramic
9	Chamber stack	Composite
11	Air handling unit	Composite
14	Connection part for hydraulic	Composite
15	Non-return valve discharge	Composite
16	Cover for hydraulic	Composite
17	Drain plug	Composite
18	Fittings, thread R 1" / NPT 1"	Composite

Approvals and markings

Safety approvals



TM075405



TM074611



TM074115

Drinking water approvals

ACS

TM074613



TM074116

Suction performance

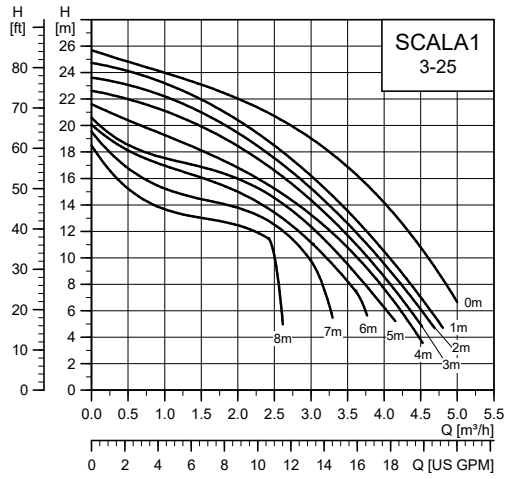

TM075531

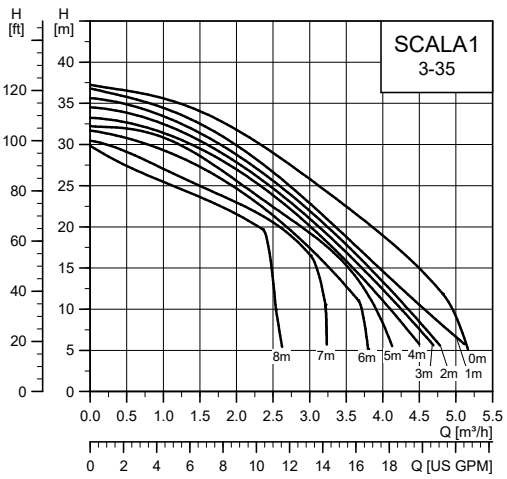

TM075532

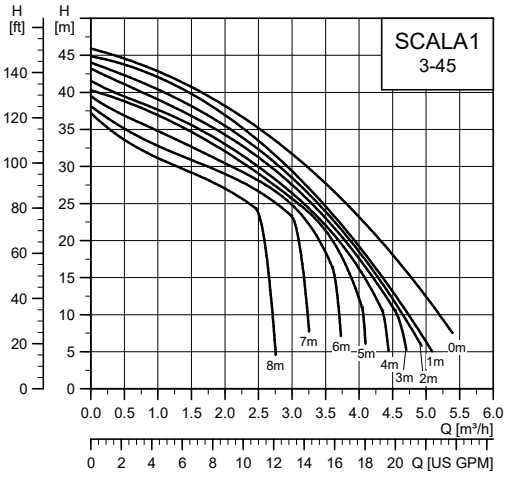

TM075533

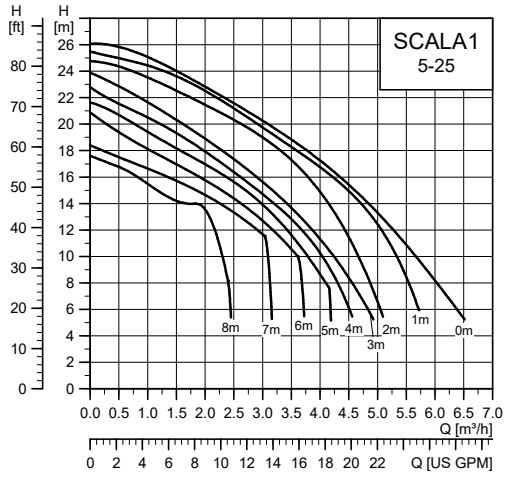

TM075534

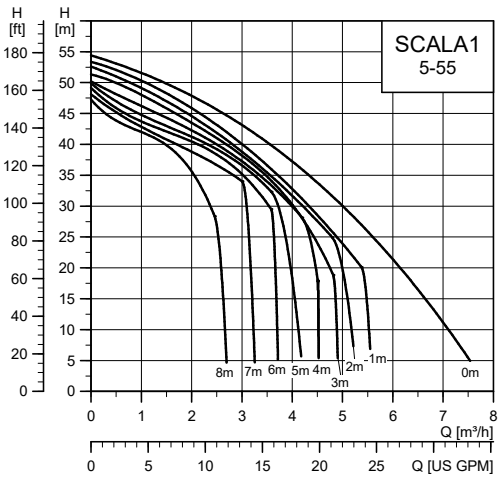

TM075535

5. SCALA1 twin booster system



TM075391

SCALA1 twin booster system

SCALA1 can be easily setup as a twin booster, in case there is a need for a stand-by pump or higher flow demand.

For this purpose, there is a dedicated accessory set that includes:

- base plate
- inlet and outlet manifolds with valves
- communication cable
- fixing screws.

In the twin setup, the two SCALA1 pumps communicate together via a cable included in the accessory kit, enabling optimum double-pump operation.

Features and benefits

The twin system has all the features and benefits of the SCALA1 pump, along with the ability to handle increased flow demand.

Easy installation

SCALA1 twin booster can be quickly installed. After the pumps are mounted on the base plate and connected with a cable and manifolds, it is only a matter of connecting to the pipe system.

Once the system is primed, it is ready to deliver water.

Alternation

Once the communication cable is connected and the system powered on, the pumps are automatically assigned a priority at the start.

Alternation determines when the pumps will switch priority in starting, enabling equal use during operation lifetime. Grundfos GO Remote allows selecting the following options:

- alternate on runtime
- alternate on the number of starts.

Alternate on runtime

Pump 1 will be the first to start until it accumulates the defined number of running hours. After that, Pump 2 will start first.

Alternate on number of starts

Pump 1 will be the first to start until it accumulates the defined number of starts. After that, Pump 2 will start first.

Grundfos GO Remote enabled

SCALA1 twin booster system can be connected to Grundfos GO Remote via Bluetooth communication to be able to adjust the system parameters to specific user needs.

Protection features

SCALA1 twin booster has all the protective functions of the SCALA1 pump.

Dry-run protection will stop each pump separately, while the anti-cycling protection and maximum runtime protection will stop the system.

Operation modes

Duty/Assist

In Duty/Assist, both pumps can run at the same time, delivering more flow on the outlet side.

If one pump is unable to meet the demand, the second pump will start up.

Duty/Standby

In this mode, only one pump will run at a time, while the other pump will remain as a standby pump.

Based on alternation settings, the pumps will switch priority in starting.

Performance curves

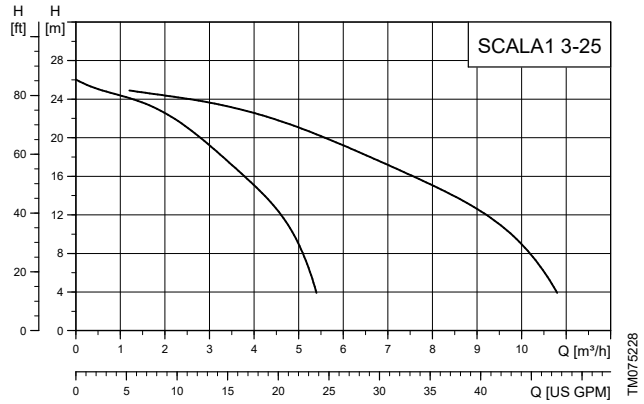

TM075228



TM075229

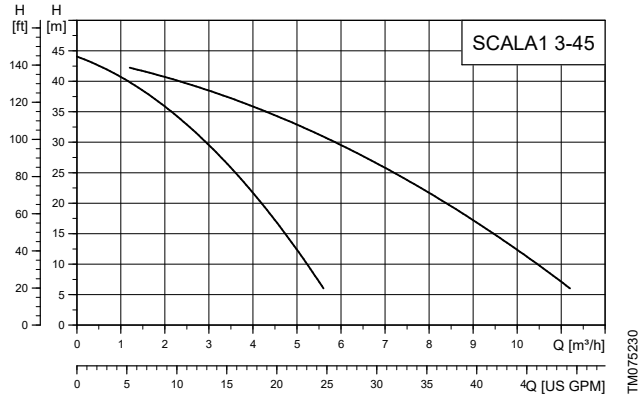

TM075230



TM075231

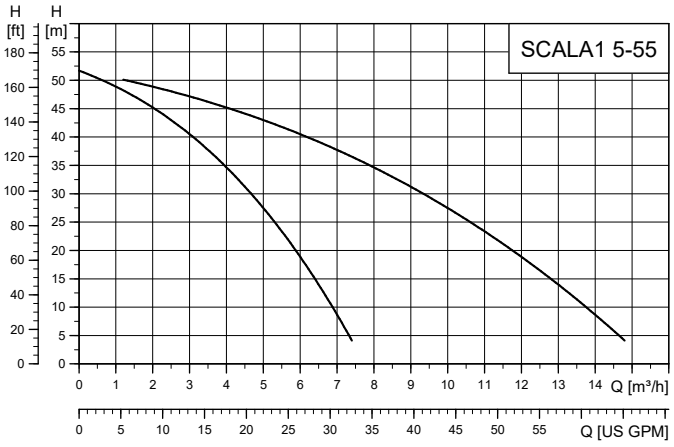

TM075232

Technical data

Dimensions

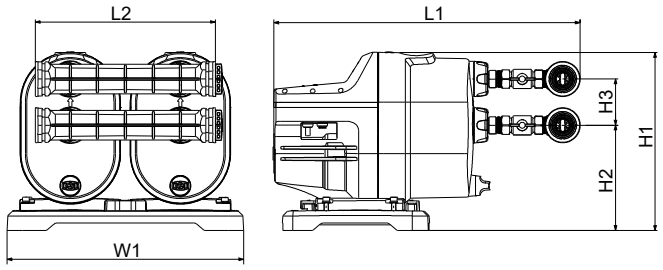

TM075401

Dimensions of SCALA1 twin system

Pos.	H1 [mm] [inch]	H2 [mm] [inch]	H3 [mm] [inch]	L1 [mm] [inch]	L2 [mm] [inch]	W1 [mm] [inch]
SCALA1 twin system	360 14.2	210 8.3	92 3.6	614 24.2	360 14.2	473 18.6

Construction of SCALA1 twin system

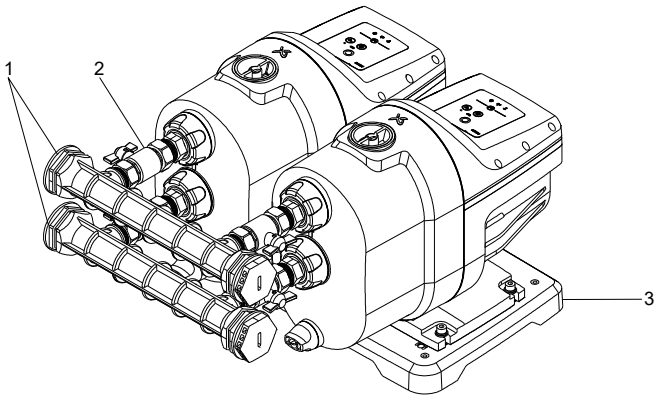

TM075400

SCALA1 twin system

Pos.	Component	Material
1	Inlet and outlet manifolds	Composite
2	Isolation valves	Brass
3	Twin base plate	Composite

6. SCALA2



TM075409

SCALA2 pump

Grundfos SCALA2 is a fully integrated, self-priming, compact waterworks for pressure boosting in domestic applications.

SCALA2 incorporates integrated speed control, enabling the ability to keep perfect pressure in the taps, which means that the pump performance will adjust to the increasing demand.

Motor

The highly efficient motor with a permanent magnet is water-cooled and equipped with sealed, greased-for-life ball bearings to ensure silent operation and minimum service.

It has a built-in thermal switch and requires no additional motor protection.

Features and benefits of SCALA2

- Perfect water pressure.
- All-in-one integrated booster.
- High energy efficiency.
- Easy selection.
- Compact.
- Low noise < 47 dB(A) with typical use.

Perfect water pressure

SCALA2 is equipped with an integrated sensor that measures the pressure discharged from the pump. The sensor sends a signal to the pump control and compares the measured pressure level with the desired pressure level, which is the pressure set according to the homeowner's needs.

If there is a difference between these two measurements, the pump control signals the frequency converter to increase or decrease the pump speed, thus maintaining a constant pressure in the system.

Self-priming

A self-priming pump ensures a stable operation, even if the pump is not fully filled with liquid. The self-priming pump is able to lift liquid from below the inlet level and handle a mix of air and liquid until the pump reaches a fully-primed pumping condition.

Robust design

The pump is designed for long and trouble-free operation. Aluminium construction combined with excellent corrosion-resistant internal components ensure high robustness in operation.

Easy installation

SCALA pumps can be installed in three easy steps:

- Connecting the pipes.
- Priming the pump.
- Plugging the pump into a power outlet.

The pump will start running after it has been plugged into a power outlet.

Protection features

Dry-running protection

The product incorporates dry-running protection that automatically stops the pump from running without liquid. Dry-running protection means less risk of pump damage and lower maintenance costs.

Anti-cycling function

The anti-cycling function prevents the product from starting and stopping too often in case of a minor leakage in the system or if a tap has not been closed completely. The anti-cycling function will stop the pump, and an alarm will be indicated.

Maximum runtime

The maximum runtime function is a timer that can turn the pump off if it runs continuously for a certain amount of time. For SCALA2, this time period is 30 minutes.

Performance curves

50/60 Hz

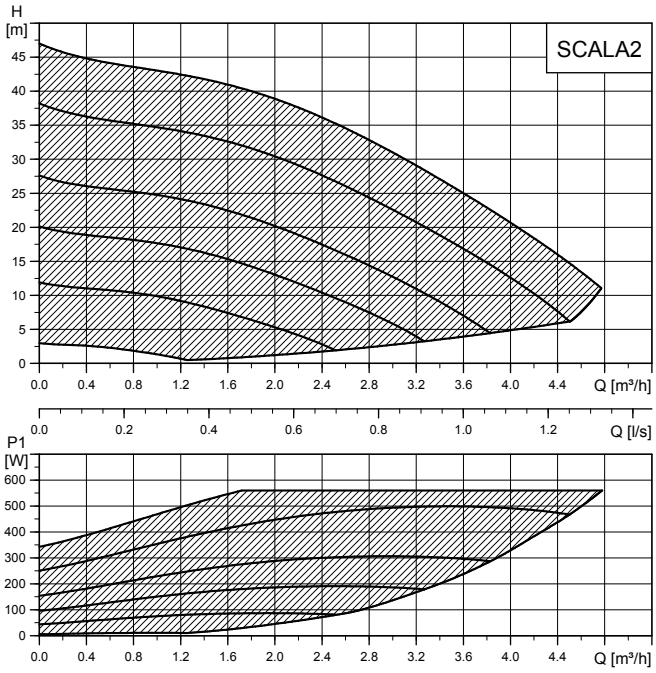

TM064320

SCALA2 performance curves

Technical data

Dimensions and weights

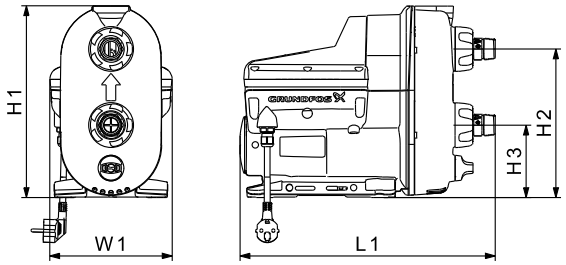

TM063305

Dimensions of SCALA2

Pos.	H1 [mm] [inch]	H2 [mm] [inch]	H3 [mm] [inch]	L1 [mm] [inch]	W1 [mm] [inch]	Weight [kg] [lb]
SCALA2	302 11.9	234 9.2	114 4.5	403 15.9	193 7.6	10 22

Operating conditions

	SCALA2 3-45
Max. ambient temperature, 60 Hz models	45 °C (113 °F)
Max. ambient temperature for 1 x 200-240 V, 50 Hz models	55 °C (131 °F)
Max. liquid temperature	45 °C (113 °F)
Maximum system pressure [bar (psi)]	10 (145)
Max. inlet pressure [bar (psi)]	6 (87)
Max. head [m (ft)]	45 (147)
Nominal head [m (ft)]	27 (88.6)
Nominal flow [m^3/h (GPM)]	3 (13.21)
IP Rating	X4D (Outdoor installation)
Pumped liquid	Clean, fresh water and chlorinated water < 300 ppm
Noise level [db(A)]	< 47

Electrical data

50/60 Hz

Voltage and Frequency [V] ([Hz])	P1 [W (hp)]	P2 [W (hp)]	n [rpm]	I_n [A]	Insulation class
1 x 200-240 (50/60) 1 x 208-230 (60) 1 x 115 (60)	550 (0.74)	450 (0.60)	5200	2.80	F

Construction of SCALA2

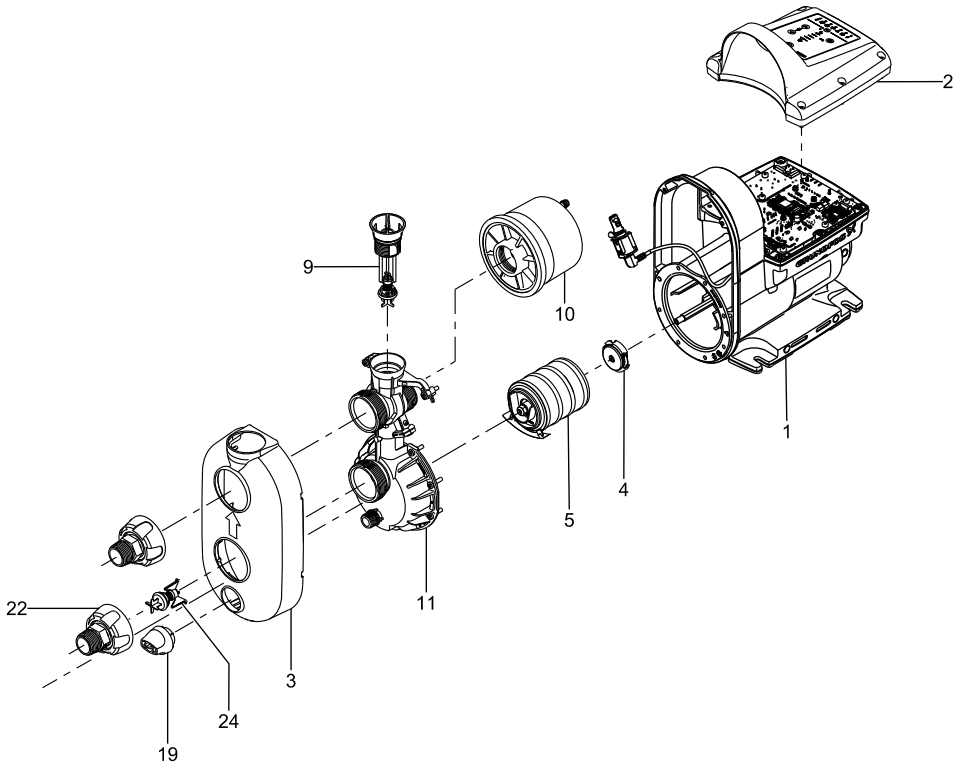

Exploded view of SCALA2

Material specification

Pos.	Component	Material
1	Combined pump and stator housing	Aluminium, Composite and EN 1.4301 / AISI 304
2	Control box cover	Composite
3	Pump cover	Composite
4	Shaft seal	Carbon/Ceramic
5	Chamber stack (four stages)	Composite
9	Non-return valve, outlet	Composite
10	Pressure tank complete	Composite, Butyl and EN 1.4301 / AISI 304
11	Connection part	Composite
19	Drain plug	Composite
22	Thread R 1" / NPT 1"	Composite
24	Non-return valve, inlet	Composite

Approvals and markings

Safety approvals

TM075405

TM074611

TM075404

Drinking water approvals

TM074610

TM074613

Combined

LISTED
Water circulation pump
99K4

WATER QUALITY
Drinking water system component
NSF/ANSI 61
MH26400
NSF/ANSI 372

TM070539

Suction performance

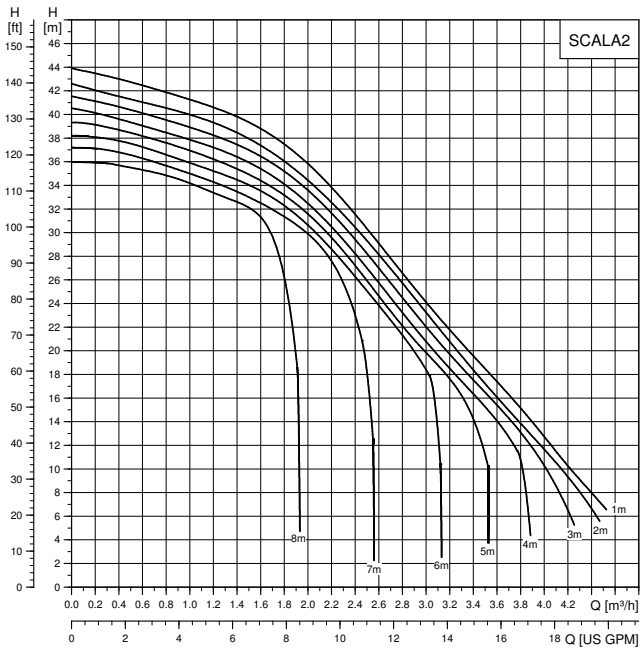

TM066277

Suction performance for SCALA2

7. Accessories

SCALA twin accessory set



Twin accessory set

When an installation requires a two-pump solution, SCALA pumps can be easily connected using this set. It includes all the necessary components to set up SCALA pumps as a twin booster system.

This set includes:

- base plate
- two manifolds (inlet and outlet) including the isolation valves
- communication cable (for SCALA1 only)
- fixing screws.

Construction of SCALA twin accessory set

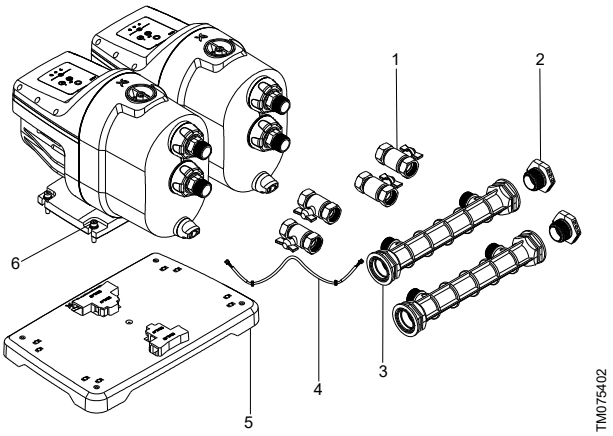

Exploded view of SCALA twin accessory set

Pos.	Component	Material
1	Isolation valves	Brass
2	Manifold cap with O-ring	Composite, NBR
3	Inlet and outlet manifolds	Composite
4	Communication cable	-
5	Twin base plate	Composite
6	Fixing screws	Stainless steel

Product numbers

Description	Valve Connection	Manifold Connection	Part number
SCALA1 twin accessory set	1" Rp	1 1/4" Rp	99725165
SCALA1 twin accessory set	1" NPT	1 1/4" NPT	99725168
SCALA2 twin accessory set	1" Rp	1 1/4" Rp	99743076
SCALA2 twin accessory set	1" NPT	1 1/4" NPT	99743075

Inlet filter



TM075393

Inlet filter accessory

When using SCALA products for pumping rainwater or well water, we recommend installing a filter on the inlet side to provide clean water to increase the longevity of the pump, and to protect it from sand, gravel or other debris.

Features of the filter include:

- Clean water provides long life for the pump.
- Quick and easy installation.
- Easy maintenance and cleaning.

The square mesh allows a uniform flow along the entire surface of the cartridge itself, which minimizes the possibility of clogging. Also, the smooth surface of the filter ensures easy washing and cleaning. The filter cartridges provide a nominal filtration with an efficiency of 80 %. If properly used, they can be used repeatedly maintaining constant efficiency.

The inside core is manufactured from talc-filled polypropylene and a welded nylon net. The filter housing is composite.

Filter specifications

Micron rating	250
Efficiency percentage	80
Max. working pressure [bar (psi)]	8 (116)
Max. differential pressure [bar (psi)]	0.8 (11.6)
Max. working temperature	45 °C (113 °F)

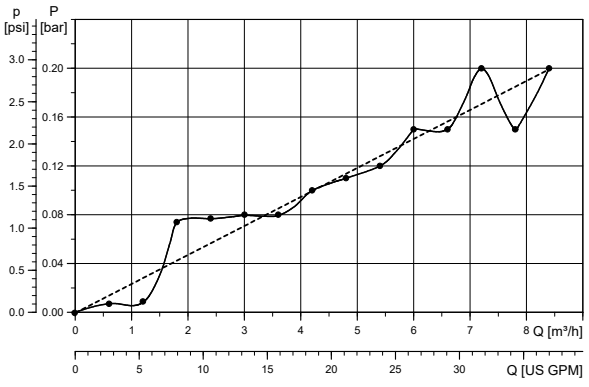

TM075373

Inlet filter pressure loss

Product numbers

Description	Connection	Part number
Inlet filter, 250 micron	1" Rp	99725183
Inlet filter, 250 micron	1" NPT	99725185

8. Product numbers

Guide on how to read the product number tables

Abbreviation	Description
SNI	Warranty card for Indonesia is included.
ARB	Printed installation and operating instructions in English (GB) and Arabic are included.
CCC	CCC approval on the nameplate.
CSA	CSA approval on the nameplate.

SCALA1

50 Hz

Pump model	Voltage	Plug type/cable	Country of origin	Product number
SCALA1 3-25	1 x 230 V 50 Hz	Schuko	Hungary	99530403
SCALA1 3-35	1 x 230 V 50 Hz	Schuko	Hungary	99530404
SCALA1 3-45	1 x 230 V 50 Hz	Schuko	Hungary	99530405
SCALA1 5-25	1 x 230 V 50 Hz	Schuko	Hungary	99530406
SCALA1 5-55	1 x 230 V 50 Hz	Schuko	Hungary	99530407
SCALA1 3-25	1 x 230 V 50 Hz	No plug	Hungary	99530408
SCALA1 3-35	1 x 230 V 50 Hz	No plug	Hungary	99530409
SCALA1 3-45	1 x 230 V 50 Hz	No plug	Hungary	99530410
SCALA1 5-25	1 x 230 V 50 Hz	No plug	Hungary	99530411
SCALA1 5-55	1 x 230 V 50 Hz	No plug	Hungary	99530412
SCALA1 3-25	1 x 230 V 50 Hz	Thailand	Hungary	99530413
SCALA1 3-35	1 x 230 V 50 Hz	Thailand	Hungary	99530414
SCALA1 3-45	1 x 230 V 50 Hz	Thailand	Hungary	99530415
SCALA1 5-25	1 x 230 V 50 Hz	Thailand	Hungary	99530416
SCALA1 5-55	1 x 230 V 50 Hz	Thailand	Hungary	99530417
SCALA1 3-25	1 x 230 V 50 Hz	Australia	Hungary	99530418
SCALA1 3-35	1 x 230 V 50 Hz	Australia	Hungary	99530419
SCALA1 3-45	1 x 230 V 50 Hz	Australia	Hungary	99530420
SCALA1 5-25	1 x 230 V 50 Hz	Australia	Hungary	99530421
SCALA1 5-55	1 x 230 V 50 Hz	Australia	Hungary	99530422
SCALA1 3-25	1 x 230 V 50 Hz	UK	Hungary	99530423
SCALA1 3-35	1 x 230 V 50 Hz	UK	Hungary	99530424
SCALA1 3-45	1 x 230 V 50 Hz	UK	Hungary	99530425
SCALA1 5-25	1 x 230 V 50 Hz	UK	Hungary	99530426
SCALA1 5-55	1 x 230 V 50 Hz	UK	Hungary	99530427
SCALA1 3-25 SNI	1 x 230 V 50 Hz	Schuko	Hungary	99530428
SCALA1 3-35 SNI	1 x 230 V 50 Hz	Schuko	Hungary	99530429
SCALA1 3-45 SNI	1 x 230 V 50 Hz	Schuko	Hungary	99530430
SCALA1 5-25 SNI	1 x 230 V 50 Hz	Schuko	Hungary	99530431
SCALA1 5-55 SNI	1 x 230 V 50 Hz	Schuko	Hungary	99530432
SCALA1 3-25	1 x 230 V 50 Hz	Argentina	Hungary	99656462
SCALA1 3-35	1 x 230 V 50 Hz	Argentina	Hungary	99656484
SCALA1 3-45	1 x 230 V 50 Hz	Argentina	Hungary	99656485
SCALA1 5-25	1 x 230 V 50 Hz	Argentina	Hungary	99656486

Pump model	Voltage	Plug type/cable	Country of origin	Product number
SCALA1 5-55	1 x 230 V 50 Hz	Argentina	Hungary	99656487
SCALA1 3-25 CCC	1 x 230 V 50 Hz	No plug	Hungary	99530433
SCALA1 3-35 CCC	1 x 230 V 50 Hz	No plug	Hungary	99530434
SCALA1 3-45 CCC	1 x 230 V 50 Hz	No plug	Hungary	99530435
SCALA1 5-25 CCC	1 x 230 V 50 Hz	No plug	Hungary	99530436
SCALA1 5-55 CCC	1 x 230 V 50 Hz	No plug	Hungary	99530437

60 Hz

Pump model	Voltage	Plug type/cable	Country of origin	Product number
SCALA1 3-25 ARB	1 x 230 V 60 Hz	No plug	Hungary	99530438
SCALA1 3-35 ARB	1 x 230 V 60 Hz	No plug	Hungary	99530439
SCALA1 3-45 ARB	1 x 230 V 60 Hz	No plug	Hungary	99530440
SCALA1 5-25 ARB	1 x 230 V 60 Hz	No plug	Hungary	99530441
SCALA1 5-55 ARB	1 x 230 V 60 Hz	No plug	Hungary	99530441
SCALA1 3-25	1 x 230 V 60 Hz	No plug	Hungary	99530443
SCALA1 3-35	1 x 230 V 60 Hz	No plug	Hungary	99530444
SCALA1 3-45	1 x 230 V 60 Hz	No plug	Hungary	99530445
SCALA1 5-25	1 x 230 V 60 Hz	No plug	Hungary	99530446
SCALA1 5-55	1 x 230 V 60 Hz	No plug	Hungary	99530447
SCALA1 3-25 CSA	1 x 230 V 60 Hz	NEMA 6-15	Hungary	99631734
SCALA1 3-35 CSA	1 x 230 V 60 Hz	NEMA 6-15	Hungary	99631735
SCALA1 3-45 CSA	1 x 230 V 60 Hz	NEMA 6-15	Hungary	99631736
SCALA1 5-25 CSA	1 x 230 V 60 Hz	NEMA 6-15	Hungary	99631737
SCALA1 5-55 CSA	1 x 230 V 60 Hz	NEMA 6-15	Hungary	99631739
SCALA1 3-25	1 x 115 V 60 Hz	No plug	Hungary	99530448
SCALA1 3-35	1 x 115 V 60 Hz	No plug	Hungary	99530449
SCALA1 3-45	1 x 115 V 60 Hz	No plug	Hungary	99530450
SCALA1 5-25	1 x 115 V 60 Hz	No plug	Hungary	99530451
SCALA1 5-55	1 x 115 V 60 Hz	No plug	Hungary	99530452
SCALA1 3-25 CSA	1 x 115 V 60 Hz	NEMA 5-15	Hungary	99631740
SCALA1 3-35 CSA	1 x 115 V 60 Hz	NEMA 5-15	Hungary	99631741
SCALA1 3-45 CSA	1 x 115 V 60 Hz	NEMA 5-15	Hungary	99631742
SCALA1 5-25 CSA	1 x 115 V 60 Hz	NEMA 5-15	Hungary	99631753
SCALA1 5-55 CSA	1 x 115 V 60 Hz	NEMA 5-15	Hungary	99631754

SCALA2

50/60 Hz

Pump model	Voltage	Plug type/cable	Country of origin	Product number
SCALA2 3-45	1 x 230 V 50/60 Hz	Schuko	Serbia	98562862
SCALA2 3-45	1 x 230 V 50/60 Hz	Schuko	Serbia	99027073
SCALA2 3-45 SNI	1 x 230 V 50/60 Hz	Schuko	Serbia	99027077
SCALA2 3-45 CCC	1 x 230 V 50/60 Hz	No plug	Serbia	98562863
SCALA2 3-45	1 x 230 V 50/60 Hz	No plug	Serbia	98562865
SCALA2 3-45	1 x 230 V 50/60 Hz	No plug	Serbia	99027076
SCALA2 3-45 ARB	1 x 230 V 50/60 Hz	No plug	Serbia	99448121
SCALA2 3-45	1 x 230 V 50/60 Hz	Australia	Serbia	98562866
SCALA2 3-45	1 x 230 V 50/60 Hz	UK	Serbia	98562870
SCALA2 3-45	1 x 230 V 50/60 Hz	Argentina	Serbia	98562872
SCALA2 3-45	1 x 230 V 50/60 Hz	Chile	Serbia	99342334
SCALA2 3-45	1 x 230 V 50/60 Hz	Thailand	Serbia	99371163
SCALA2 3-45	1 x 230 V 50/60 Hz	India	Serbia	99471149
SCALA2 3-45 CSA	1 x 230 V 50/60 Hz	US	Serbia	98562817
SCALA2 3-45 CSA	1 x 115 V 50/60 Hz	US	Serbia	98562818
SCALA2 3-45	1 x 115 V 50/60 Hz	No plug	Serbia	99027074
SCALA2 3-45	1 x 115 V 50/60 Hz	US	Serbia	99027075
SCALA2 3-45	1 x 115 V 50/60 Hz	Japan	Serbia	99240350

9. Grundfos Product Center

Online search and sizing tool to help you make the right choice.
http://product-selection.grundfos.com

All the information you need in one place

Performance curves, technical specifications, pictures, dimensional drawings, motor curves, wiring diagrams, spare parts, service kits, 3D drawings, documents, system parts. The Product Center displays any recent and saved items - including complete projects - right on the main page.

Downloads

On the product pages, you can download installation and operating instructions, data booklets, service instructions, etc. in PDF format.

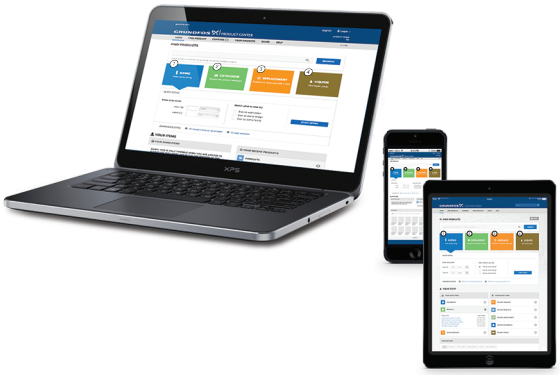

TM072384

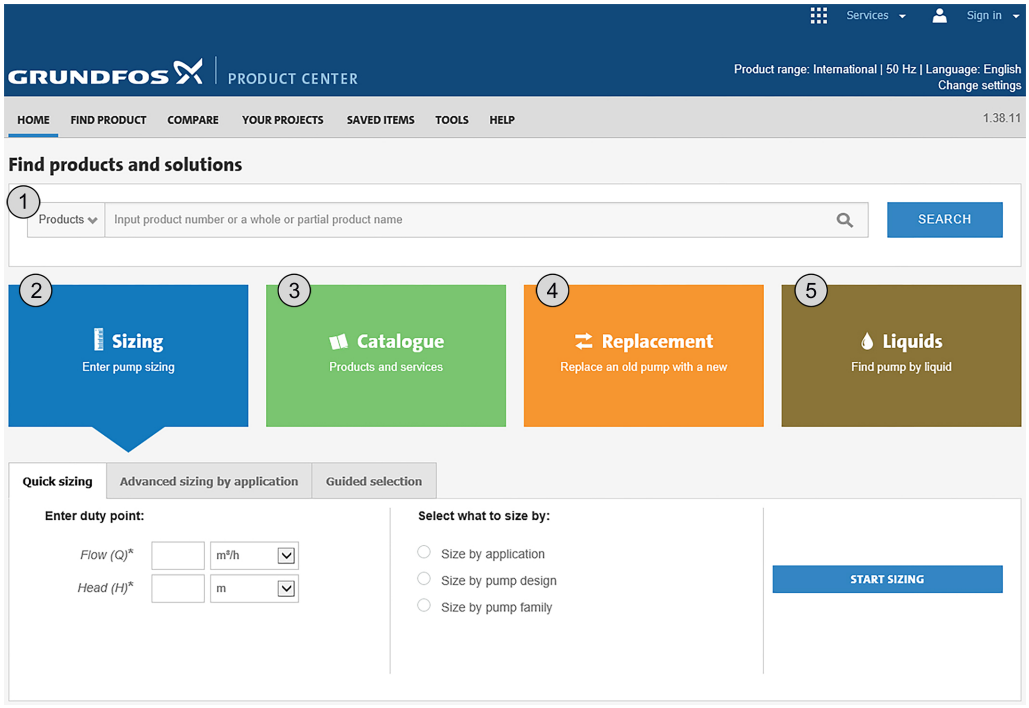

TM072383-1

Pos.	Description
1	This drop-down menu enables you to set the search function to "Products" or "Literature".
2	**SIZING** enables you to size a pump based on entered data and selection choices.
3	**CATALOGUE** gives you access to the Grundfos product catalogue.
4	**REPLACEMENT** enables you to find a replacement product. Search results will include information on • the lowest purchase price • the lowest energy consumption • the lowest total life cycle cost.
5	**LIQUIDS** enables you to find pumps designed for aggressive, flammable or other special liquids.

Argentina
Bombas GRUNDFOS de Argentina S.A.
Ruta Panamericana km. 37.500 Centro Industrial Garin
1619 - Garín Pcia. de B.A.
Tel.: +54-3327 414 444
Fax: +54-3327 45 3190

Australia
GRUNDFOS Pumps Pty. Ltd.
P.O. Box 2040
Regency Park
South Australia 5942
Tel.: +61-8-8461-4611
Fax: +61-8-8340-0155

Austria
GRUNDFOS Pumpen Vertrieb Ges.m.b.H.
Grundfosstraße 2
A-5082 Grödig/Salzburg
Tel.: +43-6246-883-0
Fax: +43-6246-883-30

Belgium
N.V. GRUNDFOS Bellux S.A.
Boomsesteenweg 81-83
B-2630 Aartselaar
Tel.: +32-3-870 7300
Fax: +32-3-870 7301

Belarus
Представительство ГРУНДФОС в Минске
220125, Минск
ул. Шафарнянская, 11, оф. 56, БЦ «Порт»
Тел.: +375 17 397 397 3
+375 17 397 397 4
Факс: +375 17 397 397 1
E-mail: minsk@grundfos.com

Bosnia and Herzegovina
GRUNDFOS Sarajevo
Zmaja od Bosne 7-7A
BiH-71000 Sarajevo
Tel.: +387 33 592 480
Fax: +387 33 590 465
www.ba.grundfos.com
E-mail: grundfos@bih.net.ba

Brazil
BOMBAS GRUNDFOS DO BRASIL
Av. Humberto de Alencar Castelo Branco, 630
CEP 09850 - 300
São Bernardo do Campo - SP
Tel.: +55-11 4393 5533
Fax: +55-11 4343 5015

Bulgaria
Grundfos Bulgaria EOOD
Slatina District
Iztochna Tangenta street no. 100
BG - 1592 Sofia
Tel.: +359 2 49 22 200
Fax: +359 2 49 22 201
E-mail: bulgaria@grundfos.bg

Canada
GRUNDFOS Canada Inc.
2941 Brighton Road
Oakville, Ontario
L6H 6C9
Tel.: +1-905 829 9533
Fax: +1-905 829 9512

China
GRUNDFOS Pumps (Shanghai) Co. Ltd.
10F The Hub, No. 33 Suhong Road
Minhang District
Shanghai 201106 PRC
Tel.: +86 21 612 252 22
Fax: +86 21 612 253 33

Columbia
GRUNDFOS Colombia S.A.S.
Km 1.5 vía Siberia-Cota Conj. Potrero Chico,
Parque Empresarial Arcos de Cota Bod. 1A.
Cota, Cundinamarca
Tel.: +57(1)-2913444
Fax: +57(1)-8764586

Croatia
GRUNDFOS CROATIA d.o.o.
Buzinski prilaz 38, Buzin
HR-10010 Zagreb
Tel.: +385 1 6595 400
Fax: +385 1 6595 499
www.hr.grundfos.com

Czech Republic
GRUNDFOS Sales Czechia and Slovakia s.r.o.
Čajkovského 21
779 00 Olomouc
Tel.: +420-585-716 111

Denmark
GRUNDFOS DK A/S
Martin Bachs Vej 3
DK-8850 Bjerringbro
Tel.: +45-87 50 50 50
Fax: +45-87 50 51 51
E-mail: info_GDK@grundfos.com
www.grundfos.com/DK

Estonia
GRUNDFOS Pumps Eesti OÜ
Peterburi tee 92G
11415 Tallinn
Tel.: + 372 606 1690
Fax: + 372 606 1691

Finland
OY GRUNDFOS Pumput AB
Trukkikuja 1
FI-01360 Vantaa
Tel.: +358-(0) 207 889 500

France
Pompes GRUNDFOS Distribution S.A.
Parc d'Activités de Chesnes
57, rue de Malacombe
F-38290 St. Quentin Fallavier (Lyon)
Tel.: +33-4 74 82 15 15
Fax: +33-4 74 94 10 51

Germany
GRUNDFOS GMBH
Schlüterstr. 33
40699 Erkrath
Tel.: +49-(0) 211 929 69-0
Fax: +49-(0) 211 929 69-3799
E-mail: infoservice@grundfos.de
Service in Deutschland:
kundendienst@grundfos.de

Greece
GRUNDFOS Hellas A.E.B.E.
20th km. Athinon-Markopoulou Av.
P.O. Box 71
GR-19002 Peania
Tel.: +0030-210-66 83 400
Fax: +0030-210-66 46 273

Hong Kong
GRUNDFOS Pumps (Hong Kong) Ltd.
Unit 1, Ground floor, Siu Wai Industrial Centre
29-33 Wing Hong Street & 68 King Lam Street, Cheung Sha Wan
Kowloon
Tel.: +852-27861706 / 27861741
Fax: +852-27858664

Hungary
GRUNDFOS Hungária Kft.
Tópark u. 8
H-2045 Törökbálint
Tel.: +36-23 511 110
Fax: +36-23 511 111

India
GRUNDFOS Pumps India Private Limited
118 Old Mahabalipuram Road
Thoraipakkam
Chennai 600 097
Tel.: +91-44 2496 6800

Indonesia
PT GRUNDFOS Pompa
Graha Intirub Lt. 2 & 3
Jln. Cililitan Besar No.454. Makasar, Jakarta Timur
ID-Jakarta 13650
Tel.: +62 21-469-51900
Fax: +62 21-460 6910 / 460 6901

Ireland
GRUNDFOS (Ireland) Ltd.
Unit A, Merrywell Business Park
Ballymount Road Lower
Dublin 12
Tel.: +353-1-4089 800
Fax: +353-1-4089 830

Italy
GRUNDFOS Pompe Italia S.r.l.
Via Gran Sasso 4
I-20060 Truccazzano (Milano)
Tel.: +39-02-95838112
Fax: +39-02-95309290 / 95838461

Japan
GRUNDFOS Pumps K.K.
1-2-3, Shin-Miyakoda, Kita-ku
Hamamatsu
431-2103 Japan
Tel.: +81 53 428 4760
Fax: +81 53 428 5005

Korea
GRUNDFOS Pumps Korea Ltd.
6th Floor, Aju Building 679-5
Yeoksam-dong, Kangnam-ku, 135-916
Seoul, Korea
Tel.: +82-2-5317 600
Fax: +82-2-5633 725

Latvia
SIA GRUNDFOS Pumps Latvia
Deglava biznesa centrs
Augusta Deglava ielā 60
LV-1035, Rīga,
Tel.: + 371 714 9640, 7 149 641
Fax: + 371 914 9646

Lithuania
GRUNDFOS Pumps UAB
Smolensko g. 6
LT-03201 Vilnius
Tel.: + 370 52 395 430
Fax: + 370 52 395 431

Malaysia
GRUNDFOS Pumps Sdn. Bhd.
7 Jalan Peguam U1/25
Glenmarie Industrial Park
40150 Shah Alam, Selangor
Tel.: +60-3-5569 2922
Fax: +60-3-5569 2866

Mexico
Bombas GRUNDFOS de México S.A. de C.V.
Boulevard TLC No. 15
Parque Industrial Stiva Aeropuerto
Apodaca, N.L. 66600
Tel.: +52-81-8144 4000
Fax: +52-81-8144 4010

Netherlands
GRUNDFOS Netherlands
Veluwezoom 35
1326 AE Almere
Postbus 22015
1302 CA ALMERE
Tel.: +31-88-478 6336
Fax: +31-88-478 6332
E-mail: info_gnl@grundfos.com

New Zealand
GRUNDFOS Pumps NZ Ltd.
17 Beatrice Tinsley Crescent
North Harbour Industrial Estate
Albany, Auckland
Tel.: +64-9-415 3240
Fax: +64-9-415 3250

Norway
GRUNDFOS Pumper A/S
Strømsveien 344
Postboks 235, Leirdal
N-1011 Oslo
Tel.: +47-22 90 47 00
Fax: +47-22 32 21 50

Poland
GRUNDFOS Pompy Sp. z o.o.
ul. Klonowa 23
Baranowo k. Poznania
PL-62-081 Przeźmierowo
Tel.: (+48-61) 650 13 00
Fax: (+48-61) 650 13 50

Portugal
Bombas GRUNDFOS Portugal, S.A.
Rua Calvet de Magalhães, 241
Apartado 1079
P-2770-153 Paço de Arcos
Tel.: +351-21-440 76 00
Fax: +351-21-440 76 90

Romania
GRUNDFOS Pompe România SRL
Bd. Biruintei, nr 103
Pantelimon county Ilfov
Tel.: +40 21 200 4100
Fax: +40 21 200 4101
E-mail: romania@grundfos.ro

Russia
ООО Грундфос Россия
ул. Школьная, 39-41
Москва, RU-109544, Russia
Тел. (+7) 495 564-88-00 (495) 737-30-00
Факс (+7) 495 564 8811
E-mail grundfos.moscow@grundfos.com

Serbia
Grundfos Srbija d.o.o.
Omladinskih brigada 90b
11070 Novi Beograd
Tel.: +381 11 2258 740
Fax: +381 11 2281 769
www.rs.grundfos.com

Singapore
GRUNDFOS (Singapore) Pte. Ltd.
25 Jalan Tukang
Singapore 619264
Tel.: +65-6681 9688
Faxax: +65-6681 9689

Slovakia
GRUNDFOS s.r.o.
Prievozská 4D 821 09 BRATISLAVA
Tel.: +421 2 5020 1426
sk.grundfos.com

Slovenia
GRUNDFOS LJUBLJANA, d.o.o.
Leskoškova 9e, 1122 Ljubljana
Tel.: +386 (0) 1 568 06 10
Fax: +386 (0)1 568 06 19
E-mail: tehnika-si@grundfos.com

South Africa
GRUNDFOS (PTY) LTD
16 Lascelles Drive, Meadowbrook Estate
1609 Germiston, Johannesburg
Tel.: (+27) 10 248 6000
Fax: (+27) 10 248 6002
E-mail: lgradidge@grundfos.com

Spain
Bombas GRUNDFOS España S.A.
Camino de la Fuentecilla, s/n
E-28110 Algete (Madrid)
Tel.: +34-91-848 8800
Fax: +34-91-628 0465

Sweden
GRUNDFOS AB
Box 333 (Lunnagårdsgatan 6)
431 24 Mölndal
Tel.: +46 31 332 23 000
Fax: +46 31 331 94 60

Switzerland
GRUNDFOS Pumpen AG
Bruggacherstrasse 10
CH-8117 Fällanden/ZH
Tel.: +41-44-806 8111
Fax: +41-44-806 8115

Taiwan
GRUNDFOS Pumps (Taiwan) Ltd.
7 Floor, 219 Min-Chuan Road
Taichung, Taiwan, R.O.C.
Tel.: +886-4-2305 0868
Fax: +886-4-2305 0878

Thailand
GRUNDFOS (Thailand) Ltd.
92 Chaloem Phrakiat Rama 9 Road
Dokmai, Pravej, Bangkok 10250
Tel.: +66-2-725 8999
Fax: +66-2-725 8998

Turkey
GRUNDFOS POMPA San. ve Tic. Ltd. Sti.
Gebze Organize Sanayi Bölgesi
Ihsan dede Caddesi
2. yol 200. Sokak No. 204
41490 Gebze/ Kocaeli
Tel.: +90 - 262-679 7979
Fax: +90 - 262-679 7905
E-mail: satis@grundfos.com

Ukraine
Бізнес Центр Європа
Столичне шосе, 103
м. Київ, 03131, Україна
Tel.: (+38 044) 237 04 00
Fax: (+38 044) 237 04 01
E-mail: ukraine@grundfos.com

United Arab Emirates
GRUNDFOS Gulf Distribution
P.O. Box 16768
Jebel Ali Free Zone, Dubai
Tel.: +971 4 8815 166
Fax: +971 4 8815 136

United Kingdom
GRUNDFOS Pumps Ltd.
Grovebury Road
Leighton Buzzard/Beds. LU7 4TL
Tel.: +44-1525-850000
Fax: +44-1525-850011

U.S.A.
GRUNDFOS Pumps Corporation
9300 Loiret Boulevard
Lenexa, Kansas 66219 USA
Tel.: +1 913 227 3400
Fax: +1 913 227 3500

Uzbekistan
Grundfos Tashkent, Uzbekistan
The Representative Office of Grundfos
Kazakhstan in Uzbekistan
38a, Oybek street, Tashkent
Tel.: (+998) 71 150 3290 / 71 150 3291
Fax: (+998) 71 150 3292

Revision Info
Last revised on 01-04-2020

be think innovate

Trademarks displayed in this material, including but not limited to Grundfos, the Grundfos logo and "be think innovate" are registered trademarks owned by The Grundfos Group. All rights reserved.

© 2020 Grundfos Holding A/S, all rights reserved.

99735562 **05.2020**

ECM: 1286154

GRUNDFOS