PRESSURE REDUCING VALVE

EN 1567 | **A**ttestation de **C**onformité **S**anitaire

TECHNICAL FACTSHEET

PN15

Yellow or Nichel-Plated

MINIRD e MINIRID M.F. pressure reducing valve

490
491

Function

Pressure reducing valves are specifically designed to reduce and stabilise the pressure of water entering a water network. Normally, pressure – from mains water - is too high and unstable to be used effectively in a domestic water system.
One of the most important characteristics of a pressure reducing valve is that it is able to provide stable downstream pressure despite varying upstream pressure.



All F.A.R.G. pressure reducing valves comply with EN 1567.

Conceived primarily for installation on professional systems and machinery, the MINIRID pressure reducing valve is useful in all applications where a requirement exists to take up limited space. MINIRID pressure reducing valves are piston-operated with compensation chamber, ensuring better stabilisation of downstream pressure as upstream pressure changes. Connection to the system is made via ISO 228/1 threaded female connections. The 1⁄4”G connection at the top of the pressure reducing valve allows to install a pressure gauge.

Technical and Construction Characteristics

Available sizes: MINIRID 1/2”G - 3/4”G - MINIRID M.F. 1/2” G
Maximum recommended operating pressure: 15 bar
Factory pressure setting: 3 bar
outlet pressure setting range: da 1,2 a 6 bar
Maximum operating temperature: 120°C (t. min 0°C not to be used in frost conditions)

All watertightness and operation tests, including outlet pressure deviation and setting range tests, are carried out in accordance with EN 1567, concerning the sizes, construction materials and performance requirements (including testing methods) of water pressure reducing valves.

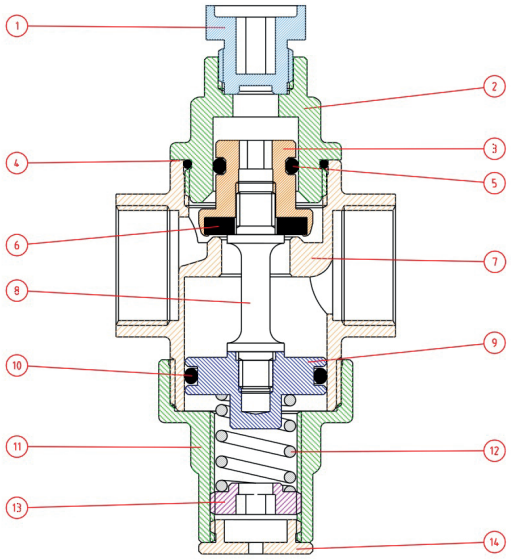

1 STOPPER ..... POLIMID A SG
2 UPPER STOPPER .....CW 617N UNI EN 12165
3 VALVE .....CW 614N UNI EN 12164
4 O-RING .....EPDM
5 O-RING .....EPDM
6 GASKET ..... EPDM
7 BODY .....CW 617N UNI EN 12165
8 ROD .....CW 614N UNI EN 12164
9 DISK .....CW 614N UNI EN 12164
10 O-RING .....EPDM
11 CAP .....CW 617N UNI EN 12165
12 SPRING .....AISI 302
13 PUSH SPRING .....CW 614N UNI EN 12164
14 LOWER STOPPER .....CW 614N UNI EN 12164

491 M.F.
1 TANG .....CW 617N UNI EN 12165
2 NUT .....CW 617N UNI EN 12165
3 GASKET ..... FASIT 202

Dimensions

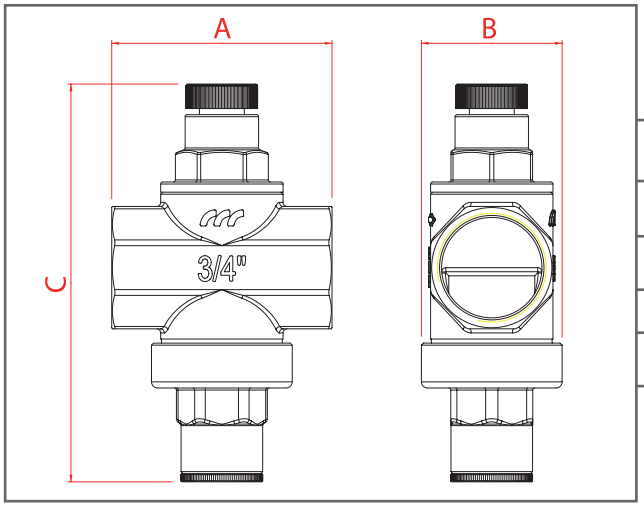

Size	A	B	C
1/2”G - DN15	50	35	100
3/4”G - DN20	55	35	100
491 M.F.			
1/2”G - DN15	83	34	100

Operation

The operation of pressure reducing valves is based on the juxtaposition of two opposing forces that develop inside them. The **force** imparted by the water pressure which tends to stop the passage of water by bringing the valve into its closing position and the opposing **force** imparted by the spring, which, instead, tends to open the passage of water. The two forces counteract each other, and, thanks to the spring’s variable compensation system, designed to compensate for varying inlet pressure, downstream pressure is maintained stable despite varying upstream pressure.

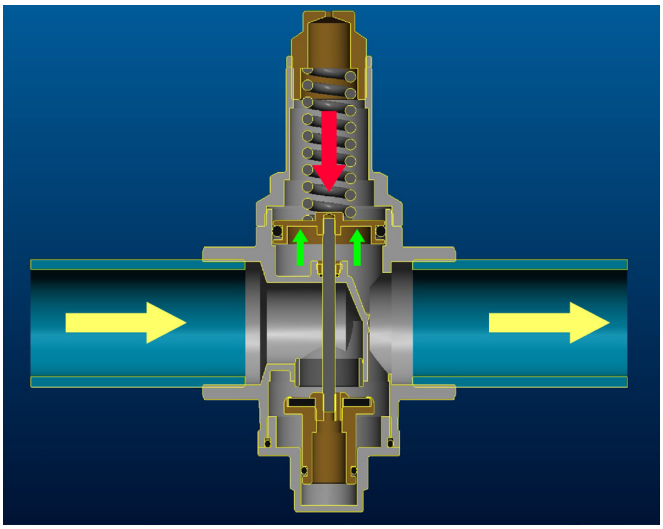

Head loss diagram

Head loss is the loss in pressure deriving from the combination of passive forces (plumbing condition, height differences, bends, junctions, etc.) that oppose the smooth flow of water inside a pipe.
Because of their construction, this also applies to pressure reducing valves.
NOTE: *to ensure correct sizing, head loss in the part of the plumbing system downstream of the pressure reducing valve should also be taken into consideration.*

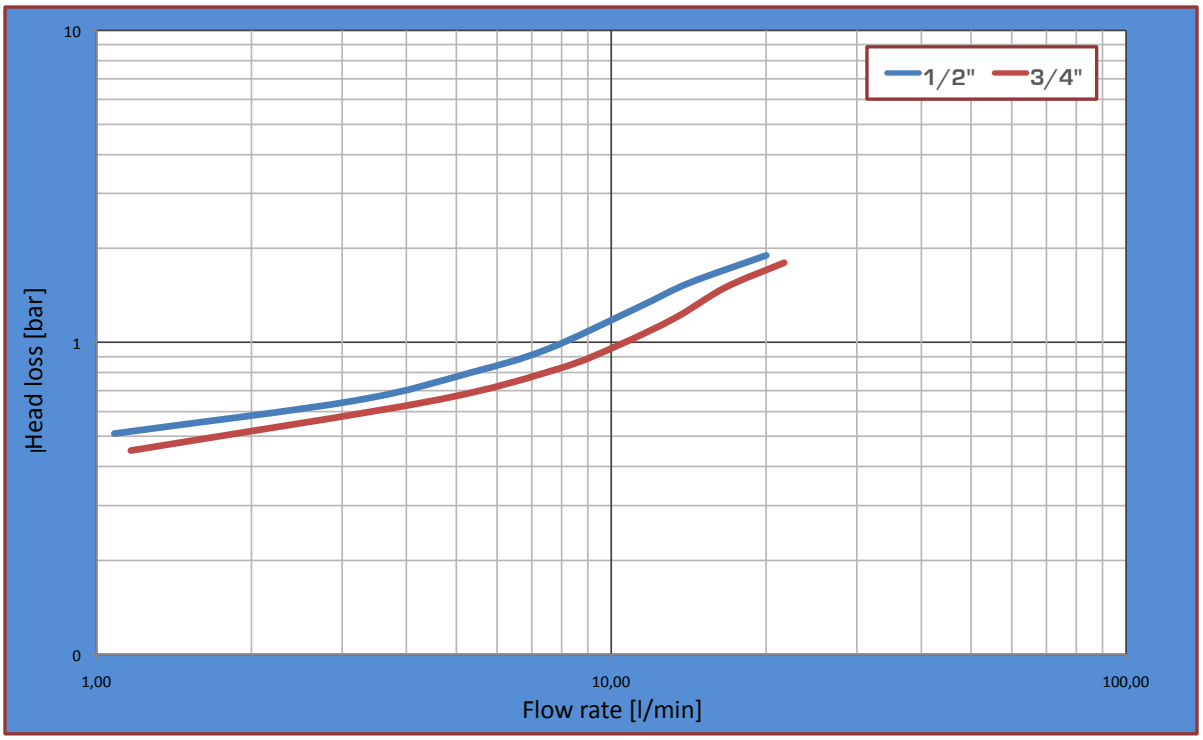

Installation

1. Before installing the pressure reducing valve, open all water taps to clear the system and bleed any air that might be trapped in the pipes.
2. Install shutoff valves both upstream and downstream of the pressure reducing valve to facilitate maintenance activities.
3. Install the pressure reducing valve following the direction of the arrow stamped on its body (it can be installed horizontally or vertically, but NOT upside down).
4. Close the upstream shutoff valve and set the outlet pressure value by acting on the spring pin: screw (turn clockwise) to increase pressure and unscrew (turn anticlockwise) to decrease pressure.



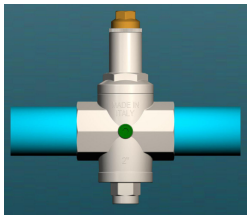

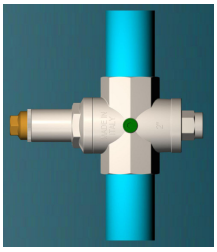

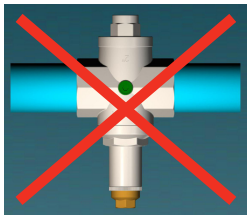

5. The pressure value can be seen on the pressure gauge.

NOTE: *All F.A.R.G. pressure reducing valves are factory set to 3 bar.*

Installation advice

Installation diagram

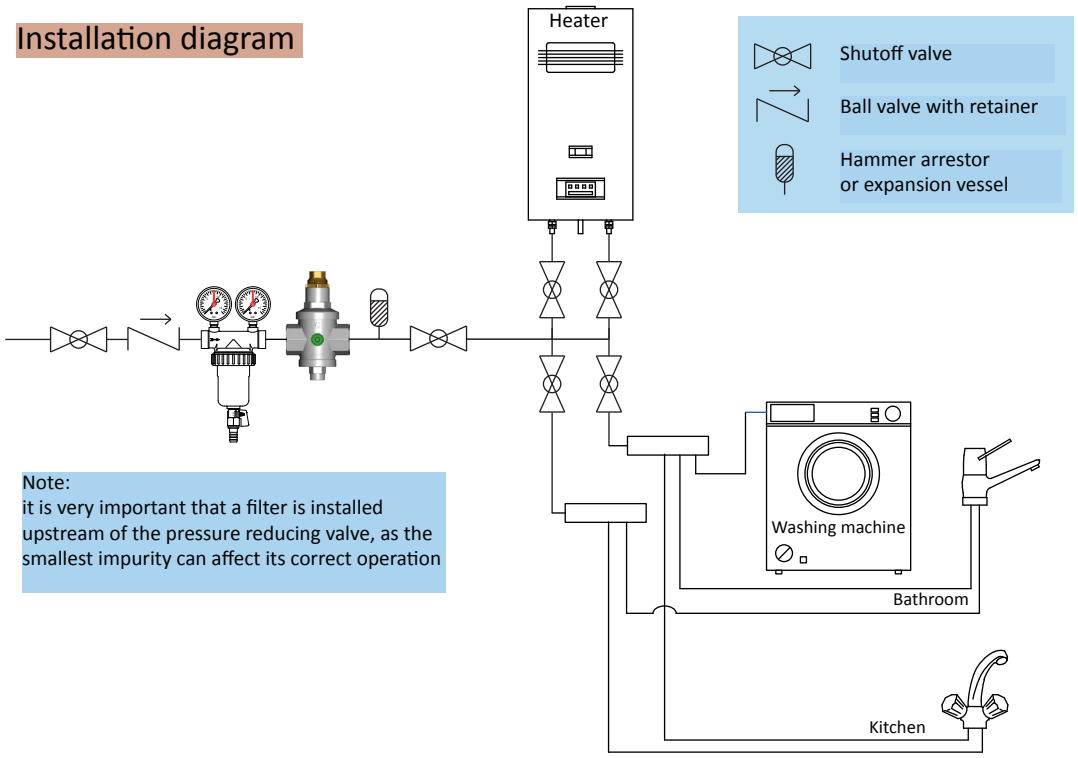

- Inlet pressure must be at least 1 bar higher than set outlet pressure.
- Turn the water on and off a few times to make sure that outlet pressure remains stable.
- Water hammers are one of the main causes of breakage in pressure reducing valves. The use of hammer absorbers is recommended in situations when water hammers are possible.
- We advice against the installation of pressure reducing valves in manholes, both because frost could damage the pressure reducing valve during the winter season and because of the limited space, which could make it difficult to read the pressure gauge and carry out routine maintenance and inspection activities.

Malfunctioning and recommendations

- In the event of installation near a boiler, the rise in water temperature causes an increase in pressure downstream of the pressure reducing valve, which cannot be released as the pressure reducing valve is in the closed position. In compliance with EU standard EN12828, concerning the design of water heating systems, an expansion vessel must be installed between the pressure reducing valve and the boiler to absorb the increase in pressure.
- In buildings with several storeys, it is advisable that a pressure reducing valve is installed at each storey, rather than one at the bottom of the building. Note that fluid loses approximately 1 bar of pressure every 10 metres of rise (approx. 3 storeys).
- Small impurities can sit in the pressure reducing valve seat and affect its correct operation. For this reason, we recommend that a filter is always installed upstream of the system, which should be maintained regularly.

release 2 - Maggio 2016

F.A.R.G. srl
28045 Invorio - Novara - Italy
Via C. Battisti n°77
Tel. +39 0322 255193
Fax +39 0322 259487
www.farg.it - info@farg.it

Azienda certificata ISO 9001:2008

ISO 9001 BUREAU VERITAS Certification

Following EN1567 Standard

A.C.S.

